SHANTUI

SE58SR

Crawler Excavator

Emissions Certified	Stage V
Gross Power	35 kW (47 hp) @ 2200rpm
Operating Weight	5.850 kg
Bucket Size	0.18 m^3
Max. Digging Depth	3640 mm

VALUE THAT WORKS

SE58SR TECHNICAL PARAMETERS

ENGINE	
Model	Kubota V2607
Type	Four-cylinder, water-cooled, direct injection, turbocharged
No. of cylinders	4
Emission standard	EPA Tier 4 Final/Europe Stage V
Displacement	2.615L
Rated power	35kW/2200rpm
HYDRAULIC SYSTEM	
Type	Axial variable plunger pump
Rated operating flow	158.4L/min
DIGGING FORCE (ISO6015)	
Bucket digging force	42.3kN
Arm digging force	26.9kN
BUCKET	
Type	Digging bucket
Bucket capacity	0.18m^3
Bucket width	600mm
TRAVEL SYSTEM	
Type	Axial variable plunger motor
Number of track rollers	5X2
Number of carrier rollers	1X2
Number of track shoes	39X2
Travel speed	2.5/4.2km/h
Traction force	70kN
Gradeability	30°
SWING SYSTEM	
Swing motor type	Swash plate plunger motor
Swing speed	0~10.8r/min
Brake type	Pressure release, mechanical braking
FUEL TANK CAPACITY (L)	
Fuel tank capacity	66
Cooling system	10.4
Engine oil	10
Hydraulic oil tank	45
System capacity	80
OPERATING WEIGHT AND GROUND PRESSURE	
Ground pressure	32.5kPa
Operating weight	5850kg

OPERATING RANGE (MM) (Boom: 2780 mm Arm: 1635 mm)	
A Max. digging height	5685
B Max. dumping height	4085
C Max. digging depth	3640
D Max. vertical digging depth	2555
E Max. digging depth cut for 2500mm level bottom	3255
F Max. digging distance	6135
G Max. digging distance at ground level	6000
H Min. swing radius of work equipment	2440

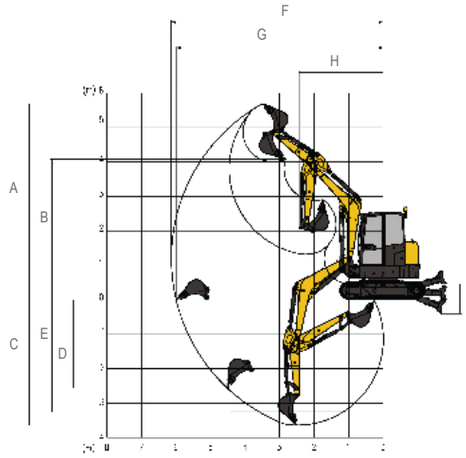

OVERALL DIMENSION (MM)	
A Overall length	5420
B Ground contact length (Transportation)	3420
C Overall height (to top of boom)	1945
D Overall width	1960
E Overall height (to top of cab)	2550
F Ground clearance of counterweight	635
G Min. ground clearance	315
H Tail swing radius	1065
I Tread	1990
J Track length	2495
K Track gauge	1560
L Track width	1960
M Shoe width	400
O Bonnet height	1690
P Revolving frame width	1865
Q Distance from swivel center to tail	1065

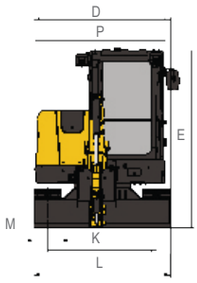

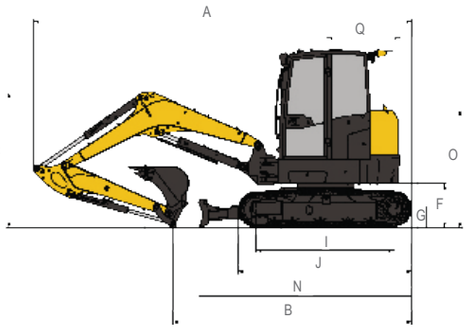

* THESPECIFICATIONS ARESUBJECT TOCHANGEWITHOUT NOTICE. THEPICTURES MAY INCLUDE OPTIONAL CONFIGURATION. THEACTUAL COLOR& APPEARANCEOF THEPRODUCT MAY DIFFERFROM WHAT IS SHOWN.

Shantui Social

SHANTUI CONSTRUCTION MACHINERY CO., LTD.
ADD: NO. 58, G327 HIGHWAY, HI-TECH ZONE, JINING CITY, SHANDONG, CHINA
TEL: +86-537-2909369 FAX: +86-537-2311219
EMAIL: trade@shantui.com WEB: www.shantui.com

SHANTUI
VALUE THAT WORKS