SHANTUI

L58K-M
Wheel Loader

Emissions Certified	Stage V
Gross Power	170 kW (228 hp) @ 2200rpm
Operating Weight	18.700 kg
Bucket Size	3.0 m^3
Dump Clearance	3450 mm

VALUE THAT WORKS

L58K-M TECHNICAL PARAMETERS

ENGINE	
Emission Regulation	Euro V
Make	Weichai
Model	WP10HG230E670
Rated Power	170kW /2200rpm
Max Torque	1150 N.m
Displacement	9.5 L
Number of Cylinders	6
Aspiration	Turbocharged
LOADER ARM PERFORMANCE	
Tipping Load - Full Turn	5500 kg
Bucket Breakout Force	≥185 kN
Maximum Dump Angle at Full Height	45°
Dump Clearance at Full Height Discharge	3450 mm
Dump Reach at Full Height Discharge	1160 mm
Maximum Hinge Pin Height	4500 mm
Maximum Digging Depth, Bucket Level	110 mm
Bucket Capacity	3.0 m^3
Operating Weight	18700 kg
TRANSMISSION	
Transmission Type	Electric control gearbox
Torque Converter	Single-stage 3-element
Maximum Travel Speed, fwd	35 km/h
Maximum Travel Speed, rev	25 km/h
Number of Speeds, fwd	4
Number of Speeds, rev	3
AXLES	
Type	Wet
Differential Type	Conventional
Axle Oscillation	±12°
STEERING	
Steering Configuration	Articulated
Steering System Pressure	16 Mpa

BRAKES	
Service Brake Type	Wet braking
Service Brake Actuation	Full hydraulic braking
Parking Brake Type	Manual electronic control
Parking Brake Actuation	Electro-hydraulic release
TIRES	
Tire Size	23.5-25
HYDRAULIC SYSTEM	
Main Pump Type	Pump
Main Relief Pressure	18 Mpa
Raise time	5.1S
Total Cycle Time	10.2 S
SERVICE CAPACITY	
Fuel Tank	300 L
Hydraulic oil Tank	170 L
Engine Oil	21L
Axles, each	Front axle 39L/ Rear axle 30L
Transmission	27 L
Antifreeze	55 kg
DIMENSIONS	
Length	8730 mm
Width	3066 mm
Height	3450 mm
Wheelbase	3300 mm
Wheel Tread	2250 mm
Ground Clearance	430 mm
Turn Angle, Either Side	35°
Turning Radius, Outside of Tire	6682 mm
Turning Radius, Center of Tire	6385 mm
Turning Radius, Bucket Carry	6685 mm

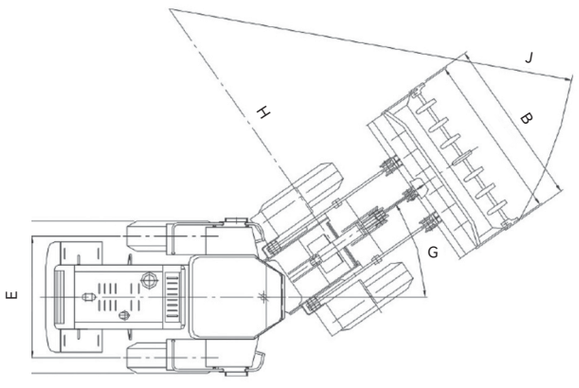

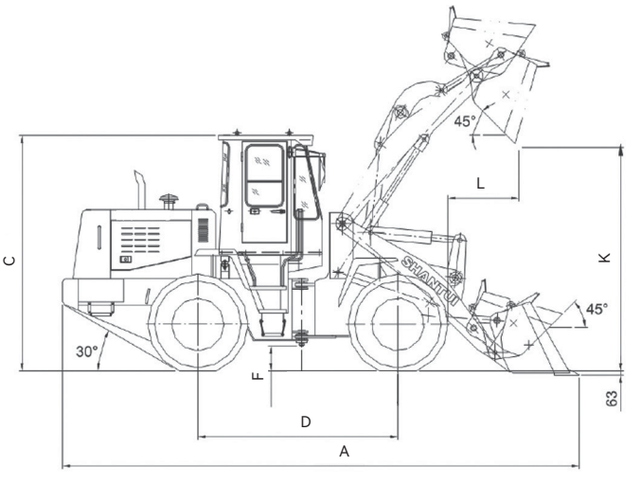

* THESPECIFICATIONS ARESUBJECT TOCHANGEWITHOUT NOTICE. THEPICTURES MAY INCLUDE OPTIONAL CONFIGURATION. THEACTUAL COLOR& APPEARANCEOF THEPRODUCT MAY DIFFERFROM WHAT IS SHOWN.

Shantui Social

SHANTUI CONSTRUCTIONMACHINERY CO., LTD.
ADD: NO. 58, G327 HIGHWAY, HI-TECH ZONE, JININGCITY, SHANDONG,CHINA
TEL:+86-537-2909369 FAX:+86-537-2311219
EMAIL:trade@shantui.com WEB:www.shantui.com

SHANTUI
VALUE THAT WORKS