SHANTUI

SE60

Crawler Excavator

Engine Model:	Kubota V2607
Gross Power:	36 kW/2000 rpm
Operating Weight:	5,960 kg
Bucket Capacity:	0.22 m^3

Municipal Garden Expert
load sensing system

SE60 SPECIFICATIONS

ENGINE	
Model	Kubota V2607
Type	Water cooled, direct injection, turbocharged
No. of cylinder	4
Emission	Tier 3 / Stage III
Displacement	2.615L
Power output	36kW/2000rpm
HYDRAULIC SYSTEM	
Type	Variable plunger pump
Max. discharge flow	152L/min
DIGGING FORCE (ISO6015)	
Bucket	48 kN
Arm	29 kN
BUCKET	
Type	Backhoe bucket
Capacity	0.11~0.22 (0.22)m^3
Width	765mm
TRAVEL SYSTEM	
Type	Axial variable plunger motor
Track roller	5x2
Carrier roller	1x2
Track shoe	40x2
Travel speed	2.7/4.6 & 2.6/4 km/h
Max. Drawbar pull	50kN
Gradeability	70% (35°)
SWING SYSTEM	
Swing motor type	Swash plate plunger motor
Swing speed	0~12r/min
Brake type	Pressure release, mechanical braking
REFILLING CAPACITIES & LUBRICATIONS	
Fuel tank	105L
Cooling system	10.4L
Engine oil	10L
Hydraulic oil tank	74L
System Capacity	110L
OPERATING WEIGHT AND GROUND PRESSURE	
Shoe width	400mm
Ground pressure	33kPa
Operating weight	5960kg

SCOPE OF WORK (mm) (Boom: 3000 mm Arm: 1600 mm)		
A	Max. digging height	5785
B	Max. dumping height	4075
C	Max. digging depth	3850
D	Max. vertical digging depth	3000
E	Max. depth cut for 2500mm level bottom	3770
F	Max. digging distance	6200
G	Max. digging radius at ground level	6060
H	Min. swing radius of work equipment	2395
I	Max lifting height of bulldozer	385
J	Max cutting depth of the bulldozer	465

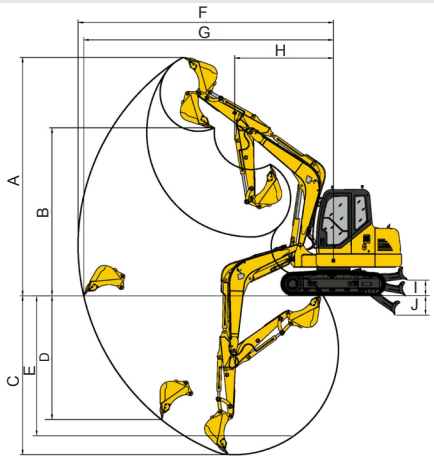

DIMENSIONS (mm)		
A	Overall length	5855
B	Ground contact length (Transportation)	3330
C	Overall height (to top of boom)	2060
D	Overall width	1880
E	Overall height (to top of cab)	2610
F	Counter weight ground clearance	710
G	Ground clearance	360
H	Tail swing radius	1655
I	Tread	1990
J	Track length	2560
K	Track gauge	1480
L	Track width	1880
M	Shoe width	400
O	Bonnet height	1635
P	Revolving frame width	1780
Q	Distance from swivel center to tail	1655

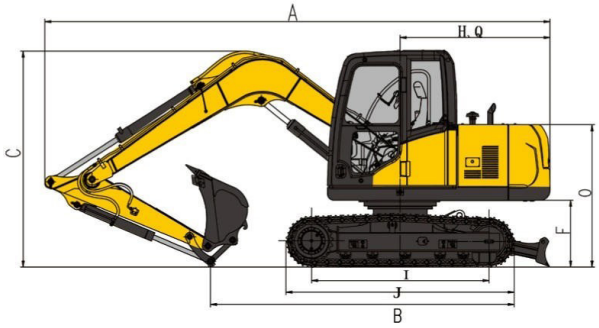

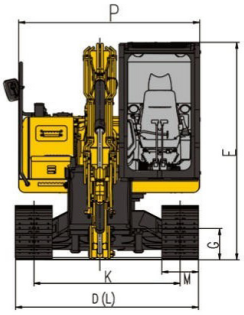

* THE SPECIFICATIONS ARE SUBJECT TO CHANGE WITHOUT NOTICE. THE PICTURES MAY INCLUDE OPTIONS. THE ACTUAL COLOR & APPEARANCE OF THE PRODUCT MAY DIFFER FROM WHAT IS SHOWN.

Shantui Social

SHANTUI CONSTRUCTION MACHINERY CO., LTD.
ADD: No. 58, G327 Highway, Jining City, Shandong, CHINA
TEL: +86-537-2909369
FAX: +86-537-2311219
EMAIL: trade@shantui.com
WEB: www.shantui.com

SHANTUI
LET'S MAKE CONSTRUCTION EASIER