XCMG

SOLID TO SUCCEED

型号	
发动机	标定功率 kW

XCMG | SOLID TO SUCCEED

XC908HST

WHEEL LOADER

Operating Weight	2980 kg
Engine Rated Power	18.2 kW
Rated Load	800 kg
Bucket Capacity	0.37 m^3

XC908HST WHEEL LOADER

The XC908HST Wheel Loader is our next-generation hydrostatic loader developed by XCMG. This compact 0.8-ton loader not only delivers powerful performance but also ensures smooth operation. It is widely utilized in municipal construction, animal husbandry, agriculture, and forestry. XC908-HST is recognized for its comfort, high maintainability, and reliability. Its precise intelligent control technology offers an extraordinary driving experience, making it suitable for operation in narrow spaces or complex terrains, enabling it to efficiently complete various tasks.

High Efficiency

- Hydrostatic transmission technology
- HA motor control

Advanced Technology

- CAE simulation analysis
- Integral frame structure
- Reinforced drive axle
- Six-link working linkage

Safe Design

- ROPS&FOPS cab
- Emergency brake button
- Ride control
- Hydraulic lock

Flexibility and Versatility

- Short-tail design(lower steering radius)
- Center articulated/hinged oscillation structure
- Standard third function quick coupler
- Various optional attachment

Comfortable Operation

- FNR integrated joystick
- Adjustable seat/steering column
- Jack simulation technology

Easy Maintenance

- Rear-flip hood
- Side-flip cab
- Centralized pressure interface

HIGH EFFICIENCY

High Quality
For Great Performance

The XC908HST wheel loader is equipped with Yanmar engine and utilizes hydrostatic transmission technology which offers real-time monitoring of hydraulic transmission components' working status, ensuring optimal power transmission system matching. Our loader delivers stronger power, higher efficiency, lower fuel consumption and enhanced overall performance.

- Hydrostatic transmission technology allows for precise control of power transmission components, leading to more efficient performance.
- The lightweight design of the overall structure is complemented by an inching brake to realize braking energy-saving.
- Featuring a positive rotation six-link working linkage, our loader provides excellent lifting force and flatness, along with high reliability in operation.

- The Yanmar engine has good power, a large torque reserve, high economy and low fuel consumption.
- Engine speed control is optimized to improve fuel economy further while extending engine life.

- The front and rear frames adopt the integral heavy-duty structure to withstand the resistance and impact loads under various working conditions.

- The reinforced drive axle has a high dynamic load coefficient, making it more suitable for heavy-duty working conditions.
- The motor's HA control can adjust its maximum and minimum displacement in real time based on the vehicle's varying loads to ensure adequate traction.
- Hydrostatic control allows real-time adjustment of the travel pump, enabling hydrostatic travel and incorporating an anti-stalling function.

SAFETY AND COMFORT

Safety First
Comfort Always

The XC908HST provides a safe and comfortable operating experience. The ROPS & FOPS certified cab is robust and durable, equipped with an emergency stop button and hydraulic lock to protect your safety. The ergonomically designed cab features easily accessible controls, reducing work intensity and improving your overall experience.

- The emergency stop button inside the cab allows for engine shutdown in emergencies.
- The hydraulic lock and quick coupler cylinder lock function reduce safety risks from misoperation.

- ROPS&FOPS cab is sturdy and stable, ensuring operating safety when subjected to severe impacts.
- CAE simulation analysis is implemented for structural components, which reduces stress concentration and eliminates partial weaknesses, with a high safety coefficient.
- Machine-completed welding processes combined with thick materials ensure firm welds, providing a high torsion coefficient and great overload resistance.

- Cooling and heating air-conditioning achieve 360°air-surrounding (circulation).
- The integrated instrument panel displays the overall status in real time and has a malfunction alarm.
- Panoramic cab provides a wider view and facilitates easier work.

- The high-performance air-suspending seat offers six-way adjustability. The handle and arm box can be individually adjusted to meet different needs of operators.
- The thick rubber floor provides excellent sealing, sound insulation and noise reduction.
- Jack simulation technology for optimal channel design.

FLEXIBILITY AND VERSATILITY

Adaptable Solutions For Every Challenge

XC908HST Loader offers exceptional flexibility for operations in confined spaces making it ideal for navigating through narrow alleys, indoor locations and crowded construction sites. XC918HST can quickly switch between various attachments, including buckets, forks, snowplows and breakers, allowing it to adapt to various work tasks.

- Optimized design and compact structure suitable for municipal construction, animal husbandry and other working conditions.
- Intelligent real-time control of motor speed and displacement offers various travel modes.

- Center articulated oscillation structure with 9° center oscillating and ±38° articulated steering.
- With a short tail design, the machine's size and turning radius are reduced, making it more flexible.

- The standard third-function hydraulic system designed for multi-purpose implements provides multiple work options.
- High-flow hydraulic circuits for enhanced performance.

- Adaptation of different standard quick coupler devices that provide flexible equipment choices and allow for on-demand replacements.
- Multiple attachment options and available customized equipment services.

EASY MAINTENANCE

Simple Maintenance Smart Solution

The optimized design ensures the proper structure of main components. The lubrication interface, pressure measurement interface and other interfaces are centralized, offering more convenient maintenance. The front-flip hood and side-flip cab can be opened at a large angle, ensuring easy access to the maintenance points and minimizing downtime.

- The Rear-flip hood opens over 45° and the side-flip cab opens 40°, providing easy access to maintain the cab engine radiator, hydraulic oil tank and filter element.
- Centralized repair point design for convenient maintenance.

- Centralized layout: the overall controller is on the left side of the cab, while the fuse box is positioned on the left of the steering column for convenient maintenance.

- Remote diagnosis, enhancing maintenance efficiency.
- Real-time monitoring of fuel consumption allows for easy analysis and effective management.

- Global coverage of marketing and service outlets ensures exceptional support.
- The implementation of the "full lifecycle" program provides global coverage of marketing and service outlets, ensuring exceptional support.

MAIN SPECIFICATIONS

Overall Parameter

Item	Parameter
Operating Weight	2930+50 kg
Bucket Capacity	0.4 m^3
Rated Load	800 kg
Max Breakout Force	22 kN
Tipping Load	Straight≥1800 kg
	Fully articulated≥1600 kg

Engine

Manufacturer/Model	Yanmar 3TNV88F-EPBK
Type	In-line three-cylinder/naturally aspirated
Rated Power	18.2 kW /2400RPM
Max Torque	90Nm/1440
Emission Stage	EU Stage V Emission Standard
Displacement	1.642 L

Transmission

Travel Speed	Forward	1 st	10 km/h
		2 nd	20 km/h
	Reverse	1 st	10 km/h
		2 nd	20 km/h
Brake Distance	4.5 m		
Tyre	30/15.5-15		
Min Ground Clearance	236 mm（31*15.5-15tyre）		

Brake

Service Brake	Hydraulic powered front-wheel brake for high reliablity
Parking Brake	Drum Brake

Hydraulic Drive System

Type	Hydrostatic drive
Pump	Closed piston pump
Rated Flow	64.5 L/min
System Pressure	42 MPa

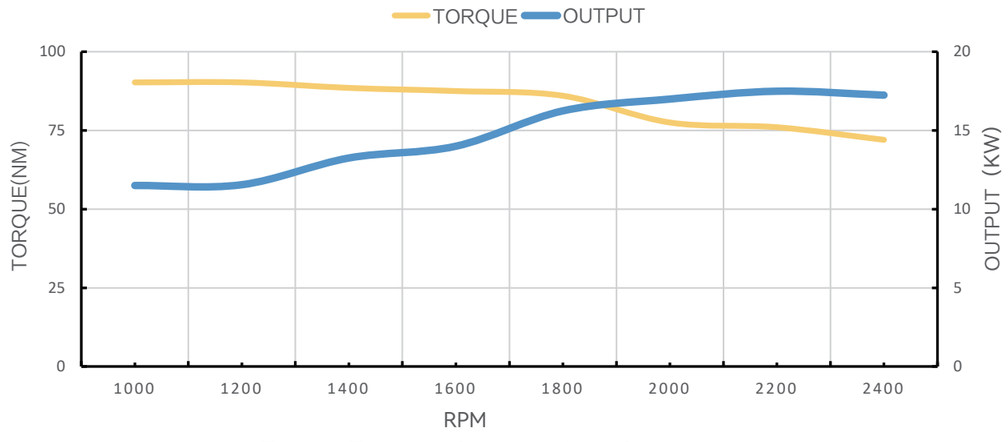

Engine External Characteristic Curve

Cab

Cab	ROPS & FOPS panoramic cab; Equipped with storage box, phone storage case, rear-view mirror, extinguisher, breaker, clothes hook; FNR integrated joystick meets high-end needs. Standard cooling and heating air-conditioner, adjustable seat and steering column provide comfortable operation.
Heating Power	3.4 kW

Axle

Type	Four-wheel drive
Front Axle	Fixed
Rear Axle	Fixed
Differential	Front/rear axle 100% differential lock

Working Hydraulic System

Type	Fixed
Pump	Gear pump
Rated Flow	45.6 L/min
Control Valve	Third function multiway valve
System Pressure	18.5 MPa
Operating Hydraulic Circuit	Lifting circuit for lifting, holding, lowering and staying movable status of the boom Tipping cylinder circuit for returning, holding and tipping the bucket
Total Circle Time	9.3 s
Hydraulic Cylinder	Lifting cylinder-2-70×40×705×451 mm
	Tipping bucket cylinder-1-90×40×995×407 mm

Steering System

Type	Load- sensitive steering system
Pump	Gear pump
Rated Flow	45.6 L/min
Hydraulic Cylinder	1
System Pressure	17.5 MPa
Max Sreering Angle	40°

Sound

Sound Pressure Level	80 dB
Exterior Sound Power Level (ISO 6393:2008)	101 dB

- The guaranteed sound levels described below may vary depending on factors including operating conditions, cooling fan speeds, engine type, and so on. Hearing protection is required if the operator works in an improperly maintained cab or is exposed to noisy environments with open doors or windows.

Referenced Filling Capacity

*Reference only. Filling volume is based on the actual scale.

Item	Filling Capacity
Diesel	40 L
Engine Oil	6 L
Front Axle	7 L
Rear Axle	7 L
Transmission	3.5 L
Coolant	6 L
Hydraulic Oil	26 L

MAIN SPECIFICATIONS

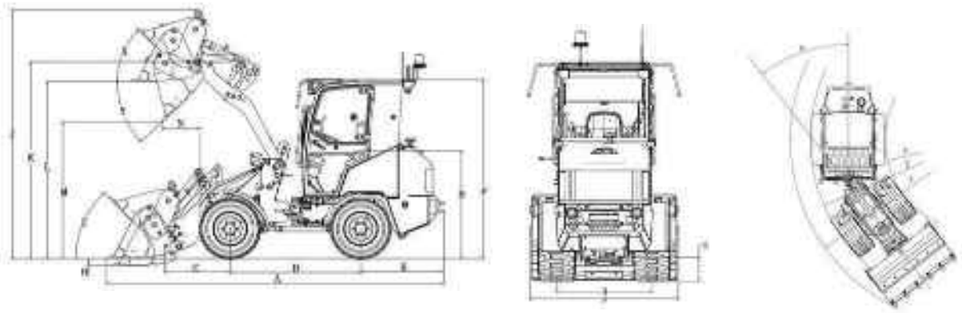

	Dimension and Specification	Parameter
A	Length: overall	4380 mm
B	Length: overall (without bucket)	3740 mm
C	Distance: center of front axle to bucket pin	737 mm
D	Wheelbase	1700 mm
E	Length: rear axle to bumper	1081 mm
F	Height: Overall	2310 mm
H	Height: seat	1250 mm
J	Height: operating (max)	3231 mm
K	Height to Hinge Pin, Fully Raised	2550 mm
L	Height to Hinge Pin, Bucket laid flat	2296 mm
M	Dumping height	1828 mm
N	Dumping reach	410 mm
O	Digging depth	102 mm
P	Width without bucket	1570 mm
Q	Wheel track	1015mm
S	Ground clearance	236 mm
T	Turning radius: over bucket	3329 mm
U	Turning radius: over tyres	2875 mm
V	Turning radius: inside of tyre	1495 mm
W	Steering angle	40°
X	Rollback angle at full lift	45°
Y	Dumping angle at full lift	43°
Z	Rollback angle: ground	40°

- The technology of XCMG wheel loaders is subject to constant improvement and upgrading. In case the specifications or detailedappearance contained in this brochure differ fromactual products, the latter shall prevail.
- XCMG reserves the right of final interpretation for the above. Our products may be modified without prior notice to users.

EQUIPMENT

Powertrain	STD	OPT
Parking brake	●	

Hydraulic System	STD	OPT
Third function quick coupler	●	
Ride control		●

Electrical System	STD	OPT
Electrical air cleaner blockage alert	●	
High beams	●	
Turn signal	●	
LED screen	●	
1 LED dome light	●	
2 Front roof working light (LED)	●	
2 Rear roof working light (LED)	●	
Instrument panel dispaly	●	
Engine coolant temperature	●	
Fuel tank display	●	
Engine tachometer	●	
Engine malfunction code	●	
Motor malfunction code	●	
Battery voltage	●	
Working hour display	●	
Battery voltmeter	●	
Battery main switch	●	
Electric horn	●	
Parking brake	●	

Safety	STD	OPT
Handheld fire extinguisher	●	
Fuel tank cover lock	●	
Boom safety lever	●	

Cab	STD	OPT
Rear wiper	●	
ROPS/FOPS cab	●	
FNR Gear	●	
Raido/USB player		●
Adjustable steering wheel	●	
Sun visor (front)	●	
Clothes hook	●	
Magazine bag	●	
Retractable safety belt	●	
Cab lock/key	●	
Single brake pedal	●	
Start-up	●	
Cup holder	●	

Other	STD	OPT
Counterweight	●	
Traction pin	●	
Splash guard (front/rear)	●	
Chassis guard	●	
Anti-corrosion spray	●	
Toolkit	●	

Attachment	STD	OPT
Light material bucket (quick coupler)		●
4 in 1 bucket (quick coupler)		●
Forklift (quick coupler)		●
Bale clamp		●
Clamp bucket		●
Manure pitchfork		●

Rotating Bale Clamp

Bale Clamp

Forklift

Quick Coupler Bucket

- XCMG loaders offer various attachment choices. Please contact your local dealer for detailed information and the delivery cycle after selection.

OPTIMUM SERVICES XCMG GUARANTEED

Telematic information Processing

Remote Diagnosis. GPS terminal system monitors the construction state of the machine and the operating.

Professional Integrated Complete Solutions

XCMG has built a strong reputation based on the quality,reliability and durability of its construction machinery. What's more, XCMG has gradually established a service network to constantly provide its local integrated and highly efficient complete solutions for all customers.

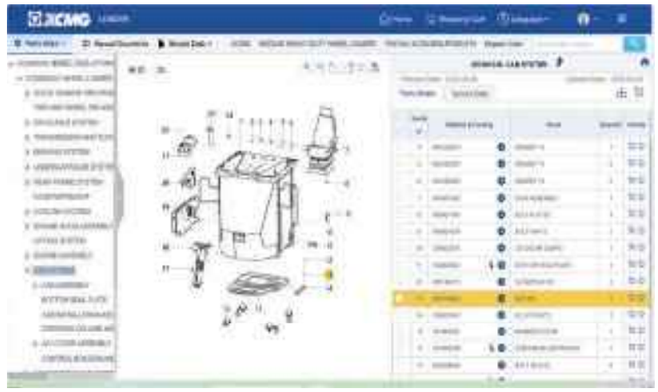

Full Range of Services Ready for you

In order to respond to your needs as fast as possible, XCMG's experts are on their way to your job site from one of our facilities near you. Full range of services are availible in order to reduce your total cost of ownership and increase your revenue.

Plateau Construction

Forestry Construction

Animal Husbandry

Road Construction

Stone Mining

Extreme Cold Working Condition

Mine Engineering

Grain Shoveling

INTRODUCTION

Our Mission and Vision: Empower Solid Future.

XCMG was initially founded as the Huaxing Iron Factory in 1943 and was established as a group in 1989. Being a trailblazer walking through the hard days in astern and steady manner, XCMG has taken the lead in development of Chinese construction machinery industry and become a billion-dollar leading enterprises with global competitiveness and influence. XCMG's performance retained its NO.1 position in China construction machinery industry and has achieved the ranking of NO.3 in the Global construction machinery industry for 3 consecutive years and has been listed in the "World Brand 500" for 4 consecutive years.

XCMG Earthmoving Machinery Division is one of the five major business divisions of XCMG.We are professionally dedicated in the R&D, manufacturing, sale and supporting service of 0.6-35tons full-series loaders, skid-steer loaders and backhoe loaders. In line with the business philosophy of facing the world, integrating the world and serving the world, XCMG Earthmoving Machinery Division takes the leading position in quality and value, and become the new benchmark in the high-end market of China earthmoving machinery industry.

TOP 3
TOP 3 Global Construction Industry

2000
More than 2000 Service Terminals

8500
More than 8500 Valid Patents

40
More than $4 Billion Annual Exports