All Rights Reserved
Materials and specifications are subject to change without notice.
Featured machines in photos may include additional equipment. See your XCMG dealer for available options.

XCMG FOR YOUR SUCCESS

XCMG European Sales and Services GmbH
Address: Europark Fichtenhain B 4,47807 Krefeld, Deutschland
Tel: +49 (0) 2151 8206 890
Fax: +49 (0) 2151 8206 899
E-Mail: info@xcmg-ess.de

XUZHOU CONSTRUCTION MACHINERY GROUP IMP. & EXP. CO., LTD
Address: No.1, Tuolanshan Road, Xuzhou Economic Developing Zone, Jiangsu, China 221004
Tel: + 86(0) 516 8773 9703
Fax: + 86(0) 516 8773 9230
E-Mail: europe@xcmg.com

www.xcmg.com

Hydraulic Excavators
XE150E

STAGE V COMPLIANT

Rated Power: 90 kW
Operating Weight: 15700 kg
Standard. Bucket Capacity: 0.65 m³

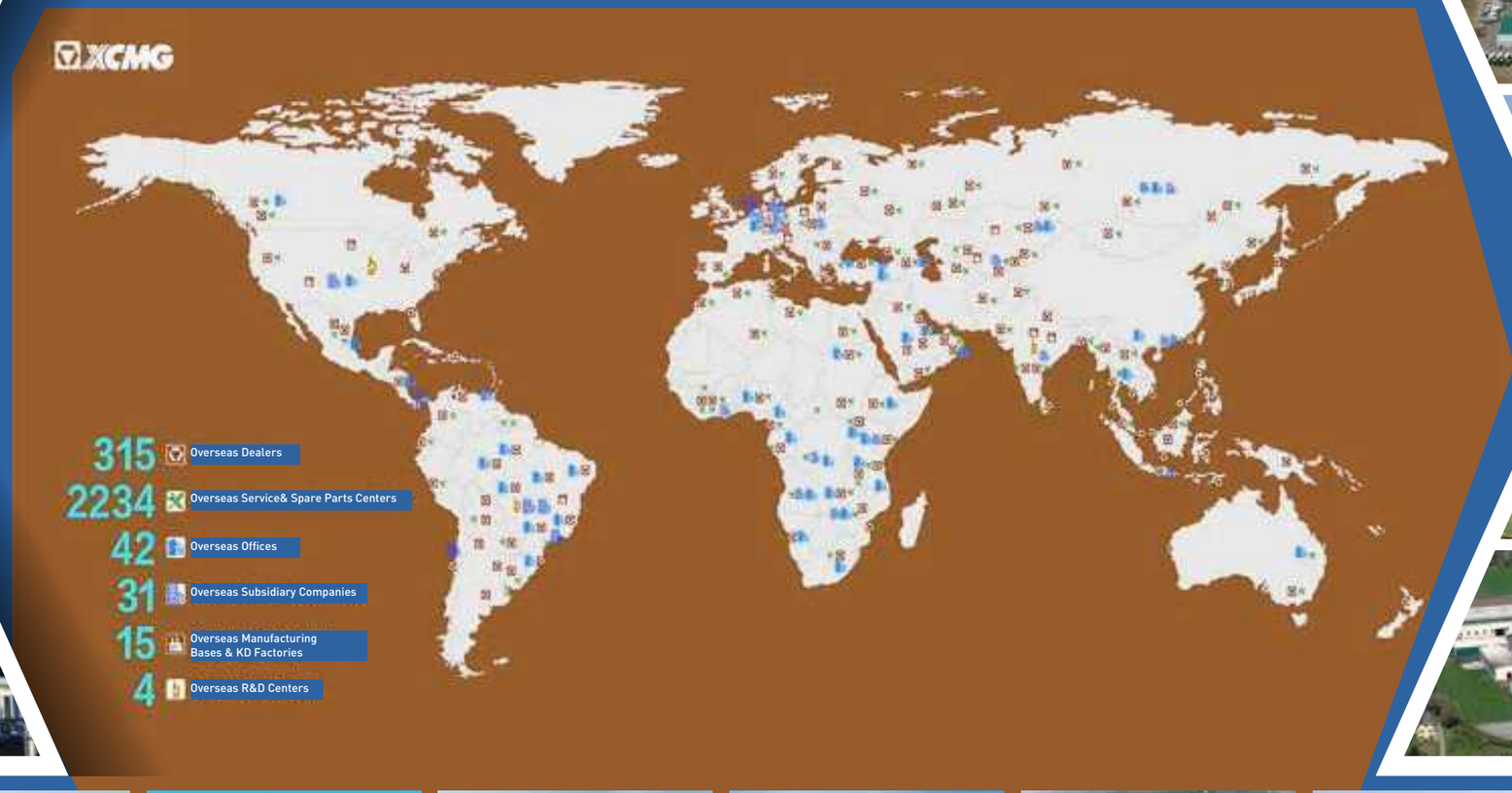

INTRODUCTION OF XCMG

Founded in 1943, XCMG is a multinational corporation with the most comprehensive range of competitive, influential products in the construction machinery industry. Our business covers eight key areas: construction machinery, heavy trucks, mining machinery, sanitation machinery, machinery components, construction, finance, and the ICT industry.

XCMG has established a global R&D network with a total of six centers in China, the US, Germany, Brazil and India, with the China national technology center at its core. In addition to a number of manufacturing bases in China, the US, Germany, the Netherlands, Poland, Austria, Brazil, India, and Uzbekistan, we possess two complete machine brands (XCMG, Schwing), and several component brands including FT and AMCA. The strength of this global R&D network and the manufacturing operations made XCMG the industry leading global construction equipment manufacturer that it is today.

For more than 30 years, XCMG has been sowing the seeds of overseas development as the No. 1 exporter in China's construction machinery industry. Today, we have 42 branches and offices, 315 distributors, and 526 contractors in 188 countries and regions worldwide and we are still growing rapidly.

XCMG IN EUROPE

Since its foundation in 2012, XCMG is gradually establishing a complete network including: R&D department, local distribution, supply chain management and an integrated customer services and training center. Nowadays, with 3 branches, XCMG has over 100 multinational employees in Europe, of which more than 50 % are R&D engineers:

ERC: XCMG European Research Center GmbH

EPC: XCMG European Purchasing Center GmbH

ESS: XCMG European Sales and Services GmbH

Our local professional R&D team and our cutting-edge innovation platform guarantee that our products are carefully crafted to the smallest detail according to the diverse needs of European customers.

XCMG XE150E builds further on its reputation from the previous series based on the quality, reliability and durability. The enhancements deliver the best in class fuel efficiency while not compromising on power reducing emissions and consumption, while increasing productivity.

If you are looking to get your work done with a durable brand you can trust XCMG and look no further than our XE150E.

RELIABILITY:
Even under the harshest conditions, XCMG has made its aim to build long-life products. XCMG has already a long relationship with the best component suppliers in the world. Cummins engines, Kawasaki KPM hydraulic pumps, main control valve and swing motor, and high quality travel motors guarantee you the best performance. Oversized cylinders in combination with long-life reinforced pins, polymer shims and bushings ensure best performance with unchanged durability.

PRODUCTIVITY AND EFFICIENCY:
Strong and unmatched bucket and arm digging forces give XE150E the ability to fulfil the most challenging tasks on your jobsite with excellent productivity and efficiency.

SAFETY SOLUTIONS:
A rear camera and large side mirrors, powerful LED lighting, anti-slip steps and platforms. Guard rails for safe access to the upper structure. The ROPS (Roll Over Protective Structure) and the OPG (Operator Protective Guard) cabin ensures the operators' safety.

VERSATILITY:
Multiple boom and arm sizes together with special configurations are available to efficiently carry out any task your business requires.

EASY-TO-USE ATTACHMENTS:
Programmable auxiliary lines AUX1 (single and dual way) and AUX2 are provided to support your hydraulic attachments like grabs, shear, hammer and many more.

COMFORTABILITY:
To ensure operator comfort, we offer a spacious cab with low noise and vibration levels and excellent all-round visibility. Fully adjustable heated air suspension seat and air conditioning with climate control as standard.

CONTROLLABILITY:
7 work and 3 power modes, proportional control with a user-friendly 8" TFT LCD color monitor.

STRONG POWER:
The Cummins QSB4.5 stage IV/Tier 4 Final engine is exceptionally powerful - with high torque at low revs. This makes that maximum flow is already available at low rpms with a fuel-efficient engine regime.

ADVANCED FILTRATION:
Easily accessible highly efficient filters and cleaners that remove all contamination from your jobsite protect your investment in the best possible way.

SIMPLE AND EASY MAINTENANCE:
Easy access to all compartments. Maintenance data and signs are directly available from monitor.

UNDERCARRIAGE DURABILITY:
The CAE designed X-shape undercarriage enables even weight distribution, increases stability and durability,and prevents damage from rocks and debris.

Excellent Performance and Fuel Economy

Power without compromise

The XE150E makes handling your task efficient and comfortable.
The optimized Kawasaki-KPM hydraulic system makes sure that all that engine power is used in the best possible way by delivering accurate maximum pumping in a smooth way.
All that power has reliably increased the digging power, the lifting capacities, and the traction force.
Greater fuel efficiency means you can keep costs down and reduce environmental impacts.

POWER MATCH TECHNOLOGY

The XE150E is equipped with a Cummins QSB4.5 engine. Famous for its excellent fuel efficiency, reliability and long service intervals it combines exceptional power output and high torque at low revs.
The engine is fitted with a high-pressure common-rail fuel system combined with cooled exhaust gas recirulation(EGR) and a Cummins VGT™ tubocharger, which increases the density of the air and enables the engine to produce more power.
Selective Catalytic Reduction (SCR) technology in combination with a Diesel Oxidation Catalyst (DOC) - ensures compliance with Stage IV regulations. There is no need for a DPF.
If the engine is the heart of the excavator, the XICS (XCMG Intelligent Control System) is its brain – providing a perfectly synchronized communication link between the engine' s ECU (Electronic Control Unit) and the hydraulic system. The CANBUS (Controller Area Network) system enables a constant flow of information between engine and hydraulic system, so that power is delivered exactly as needed.

FUEL ECONOMY TECHNOLOGY

• A choice between 3 power modes and 7 working modes guarantees optimum performance under all conditions.
• Electronic control of fuel consumption.
• The auto-idle function reduces the engine speed when the controls are inactive for a preselected amount of time or when the safety lever is switched off. The engine will immediately return to its original selected speed when the operator touches the controls.
• For optimum cooling,the fan speed is controlled by a viscous clutch that results in lower fan noise with better fuel efficiency.

Easy hydraulic maintenance:

•2000/4000 hours of hydraulic oil replacement (depending on the hydraulic oil type)
•Replace the hydraulic oil return filter after 500 hours
Replacement of the hydraulic oil suction filter element after 2000 hours

Less engine service:

• 500 hours engine diesel filter replacement
• 500 hours engine oil and filter replacement
• The long service intervals guarantees limited downtime.

First Choice for Comfort

The XE150E cabin is designed to support increased productivity with a spacious comfortable operator environment. The pressurized cab is ISO-certified for your safety and offers a comfortable heated fully adjustable air-suspension seat with several storage compartments and a clear all-round view of your jobsite. The reduced noise and vibration levels with automatic air-conditioning/climate-control will make your workday more easy and comfortable.

Power
An industry-leading Cummins engine that saves on fuel and meets the Stage IV/Tier 4 F emission regulations powers the XCMG XE150E.

Advanced control technology
Ergonomic, advanced and simple-to-operate - Kawasaki's proportional joystick delivers ultra-precise and smooth control over all movements. The orientation of the joystick's rollers and buttons are adjustable.

Air conditioning with automatic climate control
A choice from 5 different working modes to regulate the airflow and to adjust the system's air temperature maintains the optimal desired temperature. A recirculation function is also available.

MP3/USB radio as standard and Bluetooth radio as option
Standard MP3/USB FM radio. Optionally we now also offer the radio with Bluetooth function.

Storage space
The new cab has 7 storage compartments - including a hot/cool box, a storage box for magazine/papers and a cup holder.

Cab suspension
Even at the roughest applications where you are working,the cab's improved new suspension system dampens and smoothens out unwanted feedback from your jobsite.

Quick coupler control
A standard quick coupler hydraulic system with pipelines lets you exchange your attachment easily from the operator' s seat. It facilitates the most common systems.

1. Heated air suspension seat
2. Large travelling pedal
3. Throttle dial
4. Cub holder
5. All around AC and heating
6. Proportional hydraulic joy sticks
7. High quality speakers
8. Emergency stop
9. Hammer control pedal
10. Armrest
11. LCD monitor

Simple and Easy Control

Machine interfaces

All machine interfaces – including joysticks, keypad, panel, and larger LCD monitor – are ergonomically designed for optimum control and efficiency, resulting in increased productivity and workplace well being. The switches have been simplified and climate control is now integrated into the keypad for easy adjustments.

•The new multi-function 8" TFT LCD monitor displays a comprehensive range of useful technical information, allowing you to check the machine's status and settings at a glance.

•Highly sensitive and low-effort joysticks and clear convenient controls enable you to work smooth and safely with minimum effort for increased comfort and efficiency.

•The newly adjustable proportional auxiliary functions support precise and smooth control of your attachments.

Intelligent Monitor

The upgraded 8" TFT monitor features a day and night display with full user access to the machine settings and maintenance data. Any abnormality is clearly displayed on the screen, allowing you to work safely and confident with an accurate overview of all conditions.

All-important data can be directly monitored from the main screen.

1.Blue-tooth 2.Energy-saving mode indicator
3.Travel speed indicator 4.Automatic idling indicator
5.Power reinforcing indicator 6.Implement mode indicator
7.Power mode indicator 8.Alarm icon prompt area
9.Surveillance image 10.Clock time
11.Urea level 12.Buzzer silence indicator
13.Main interface function settings 14.Main menu
15.Coolant temperature gauge 16. Fuel level gauge
17.Fault code display 18.Fault analysis content
19.Work hour display

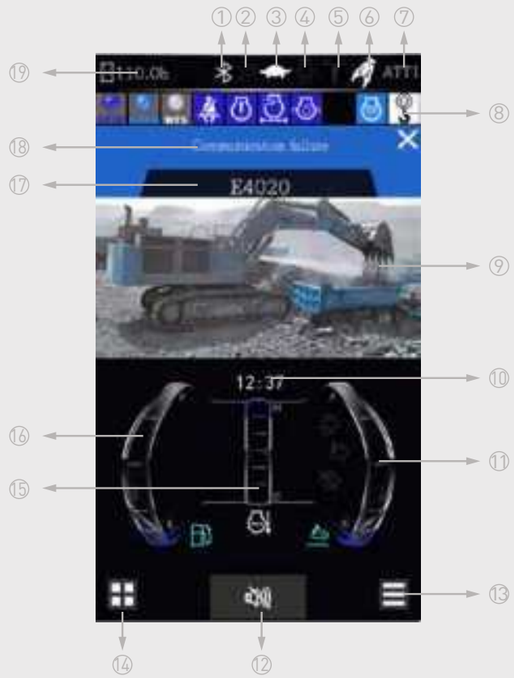

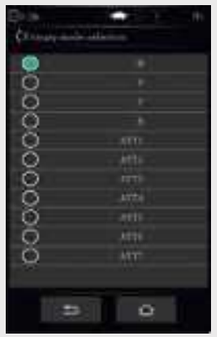

Dynamic power management

•Activating the power boost control system increases the digging force by 8.8%

•Auto-idling starts 2.5 seconds after all controls are returned to the neutral position.

7 work modes and 3 power modes

Deliver the needed power according to your specific application while minimizing fuel consumption:

•N: Normal mode
P: Power mode
T:Plateau mode
B: Breaker mode
ATT1:Hydralic shear mode
ATT2:Hydralic thumb mode
ATT3:Hydralic rotating attachment mode
ATT4/ATT5/ATT6/ATT7:Auxiliary mode

Reliability

Designed for long-term robustness and safety

XCMG has developed one of the most rigorous strength and reliability testing procedures, The XCMG E-series features durability under the most extreme conditions and is therefore one of the most popular brands in its home market.
We continually manufacture the most durable machines in order to reduce the cost of ownership. The robust upper frame, undercarriage structure, and front attachments show their real value in tough working conditions and guarantee higher productivity.

Reinforced durability of the X-chassis
The X-shaped undercarriage has a higher durability than demanded on the jobsite, as proven through numerous tests including road tests and virtual simulation.

Undercarriage durability with easy maintenance
• The chain is composed of sealed, self-lubricating links for long-term performance
• Long life track tensioners and the idlers
• Heavy-duty wear resistant cast sprockets
• Durable lubricated track rollers

Strengthened boom and arm
FEA has been used to calculate the best load distribution throughout the machines structure. For better protection of the base of the arm, reinforced bars have been added.The arm structure have been strengthened for the roughest conditions.

Hi-grade (high-pressure) hoses
The E-series uses a new type of high-pressure hoses with improved heat and pressure resistance to increase the durability of the machine.

Reinforced pin,bush and polymer shim
The new series improved the lubricity of the connecting parts between the machine and attachments. Gaps with attachments are minimized by wear-resistant long-life pins, bushes, and polymer shims, supporting the highest performance with invariable durability.

Maintenance

Excellent serviceability

Our machines are designed for simple routine maintenance, while skilled XCMG technicians are available to provide extra support if needed. To get the most out of your machine, choose the package you need from a broad range of service agreements. Uptime, productivity and residual value are all maximized, making the XE150E an economical and rewarding choice.

Simple and easy maintenance
•A large guard rail is installed along with anti-slip steps and plates, for safer and easier access to the upper structure
•The cab's air-conditioning filter is lockable and placed on the cab's side for easy access
•A battery cut-off switch to easily disconnect the battery for jobsite-required safety measures.
•Shut-off valves on the pre-filter piping line and the fuel tank drain piping makes servicing easier and prevents pollution from leakage.
•The engine parts can be reached easily via the top and side panels
•For extra accessibility and servicing convenience, all filters (engine oil filter, fuel pre-filter, fuel filter and hydraulic pilot filter) are located in the pump compartment.

Pre-start monitoring system
The XE150E has a pre-start monitoring system that shows you coolant temperature, hydraulic oil temperature, engine oil pressure, fuel levels and AdBlue® level. It will also show fluid and filter intervals to keep the machine in top performing condition.

Proactive maintenance solutions
•Extended warranty: covering parts, travel, and labor
•Routine maintenance: your dealer will support you with routine service at regular intervals
•Genuine parts: manufactured and tested to ensure long lifetime of your machine.

SCR tank and easy diesel filling
The ECU (Engine Control Unit) monitors with sensors of the AdBlue®system and warns the operator for potential system malfunctions.
Fuel filler pump, an on-board pump system, lets you fill your fuel tank quickly from an external source (like a fuel drum) – the system stops automatically when the fuel tank is full or the fuel source is empty.

Centralized lubrication greasing points
To make maintenance easier.

Technical Specifications

Engine

Designed to deliver superior performance and fuel efficiency, the Cummins Stage IV diesel engine fully meets the emissions regulations. To optimize machine performance, the engine uses high-pressure fuel injectors, a VGT ™ turbocharger inter-cooler, and electronic engine controls. 4-cycle water-cooled, turbocharged, Exhaust Gas Recirculation (EGR) and \ Selective Catalytic Reduction (SCR) without a Diesel Particulate Filter (DPF).

	XE150E
Model	Cummins QSB4.5
No. of cylinders	4
Rated power at 2200 rpm	
(SAE J1995)	90 kW (121 hp) at 2200 rpm
(SAE J1349)	—
(ISO 9249)	—
Max. torque at 1500 rpm	48.0 kgf.m (500N.m)
Idle (low - high)	700 - 2100 rpm
Piston displacement	4.5L
Bore × stroke	107mm × 124 mm
Starter	24 V × 4.8 kW
Batteries - Alternator	2 × 12 V, 100Ah - 24 V, 70 A
Air filter	"Donaldson's the latest PSD air filter and pre-filtered dust separator"

Undercarriage

Extremely robust construction throughout - made of high-quality, durable materials, with all welded structures designed to limit stresses.

- Lifetime lubricated track rollers,idlers and sprockets fitted with floating seals
- Track shoes made of induction-hardened alloy with triple grouser
- Heat-treated connecting pins
- Hydraulic track adjuster with shock-absorbing tension mechanism

• •Number of rollers and track shoes per side

	XE150E
Upper rollers (standard shoe)	1
Lower rollers	7
Number of links and shoes per side	45
Overall track length	3658

Hydraulic system

The XICS (XCMG Intelligent Control System) is the brain of the excavator - minimizing fuel consumption and is enabling the efficiency of the hydraulic system to be optimized for all working conditions. To harmonize the operation of the engine and the hydraulics, the XICS is connected to the engine's electronic control unit (ECU) via a data transfer link.

- The hydraulic system enables independent and combined operations -2-speed travel offers either increased torque or high travel speed
- Cross-sensing pump system and auto-deceleration system improves fuel efficiency.
- 7 work modes, 3 power modes - flow and pressure control of auxiliary hydraulic circuits from the control panel
- Computer controlled pump flow control

• Pump flow and system pressure

	XE150E
Main pumps, type:	"2 × variable displacement tandem axial piston pumps"
Maximum flow at 1750 rpm	2 × 114 L/min
Pilot pump, type:	Gear pump
Maximum flow at 1750 rpm	17.5 L/min
Relief valve settings:	
Pressure up	34.3/37MPa
Travel	34.3MPa
Swing	25MPa
Pilot	3.9MPa

Hydraulic cylinders

High-strength steel piston rods and cylinder bodies.A shock-absorbing(cushion) mechanism fitted in all cylinders for shock-free operation and extended piston life.

Cylinders	Quantity	XE150E
Boom	2	105 × 70 × 941
Arm	1	115 × 80 × 1120
Bucket	1	100 × 70 × 875

Weight

	Shoe width (mm)	Operating weight (t)	Ground pressure (kPa)
Triple grouser	500(Std.)	15510	47
	600	15720	40
	700	15940	35
	800	16150	31

Component weights

Item	Unit	XE150E	Remarks
Upper structure without front attachment	kg	8368	With counterweight
Lower structure assembly	kg	5058	500 mm shoe
Front assembly	kg	2083	Without cylinder
Counterweight	kg	2960	Standard counterweight:
Boom	mm / kg	4600/896	Including bushing
Arm	mm / kg	2520/457 3010/539	Including bushing

Technical Specifications

Swing mechanism

The swing mechanism uses an axial piston motor, driving a 2-stage planetary reduction gear for maximum torque bathed in oil.

- Swing bearing: single-row, shear type ball bearing with induction hardened internal gear
- Internal gear and pinion immersed in lubricant

• Swing speed & torque

	XE150E
Maximum swing speed	11.7 rpm
Maximum swing torque	34 kN.m

Drive

An independent, high-torque axial piston motor through a planetary reduction gearbox drives each track. Two levers with foot pedals guarantee smooth travel with counter-rotation on demand.

The track frame protects the travel motors with hydraulically released multi-disc brakes and planetary gears.

• Speed & traction

	XE150E
Travel speed (low - high)	2.9-4.7 km/h
Maximum traction	127kN
Maximum gradeability	35° / 70%

Fluid capacities

	XE150E
Fuel tank	250 L
Hydraulic oil tank	95 L
Engine oil	11 L

Cab

Optimal climate control is provided by the integrated air-conditioning and heating system. An automatically- controlled fan supplies the pressurized and filtered cab air, which is distributed throughout the cab from multiple vents. The fully adjustable heated air suspension operator's seat includes a seat belt. The operator can adjust the ergonomic seat and joystick console separately according to his preferences.

Note – Declared single-number noise emission values are the sum of measured values and the associated uncertainty, and they represent upper boundaries of the range of values which is likely to occur in measurements.

• Noise emission

	XE150E
Noise level LpA (ISO 6396)	71 dB(A)
Noise level LwA (ISO 6395)	101 dB(A)

Lifting Capacities

Standard track width: 2490 mm · W/o Bucket

Unit: 1000 kg	A	1.5 m		3.0 m		4.5 m		6.0 m		Max. reach		
	B											A
One-piece boom 4.60 m Arm 2.52 m Shoe 500 mm Counterweight 3.0	6.0 m					3.2*	3.2*			2.5*	2.5*	5.4
	4.5 m					3.4*	3.4*	3.3*	2.5	2.4*	2.3	6.4
	3.0 m			5.6*	5.6*	4.1*	3.8	3.5*	2.5	2.3*	2	6.9
	1.5 m			8.1*	6.4	5.0*	3.6	3.7	2.4	2.5*	1.9	7
	0.0 m			7.1*	6.1	5.5	3.4	3.6	2.3	2.8*	1.9	6.9
	-1.5 m	4.9*	4.9*	8.6*	6	5.4	3.3	3.6	2.3	3.3	2.1	6.4
	-3.0 m	9.0*	9.0*	7.3*	6.1	5	3.4			3.8*	2.7	5.4

Unit: 1000 kg	A	1.5 m		3.0 m		4.5 m		6.0 m		Max. reach		
	B											A
One-piece boom 4.60 m Arm 2.52 m Shoe 600 mm Counterweight 3.0	6.0 m					3.2*	3.2*			2.5*	2.5*	5.4
	4.5 m					3.4*	3.4*	3.3*	2.5	2.4*	2.3	6.4
	3.0 m			5.6*	5.6*	4.1*	3.8	3.5*	2.5	2.3*	2	6.9
	1.5 m			8.1*	6.4	5.0*	3.6	3.7	2.4	2.5*	1.9	7
	0.0 m			7.1*	6.1	5.5	3.4	3.6	2.3	2.8*	1.9	6.9
	-1.5 m	4.9*	4.9*	8.6*	6	5.4	3.3	3.6	2.3	3.3	2.1	6.4
	-3.0 m	9.0*	9.0*	7.3*	6.1	5	3.4			3.8*	2.7	5.4

: Over front
: Over side or 360°

1.The lifting capacity is based on the ISO10567 standard.
2.* = The maximum lifting capacity is limited by the hydraulic capacity of the machine.
3.The lifting capacity does not exceed 87% of the hydraulic capacity or 75% of the tipping load with the machine on level and firm ground.
4.The operator should be familiar with the machines operating- and maintenance manual.Local regulations concerning the safe operation of machinery must be followed at all times.
5.The lift diagrams only covers machines that are originally built by XCMG: without lifting chains and any other lifting equipment.
6.When the excavator is used to lift or handle materials, it must comply with local regulations.

Dimensions

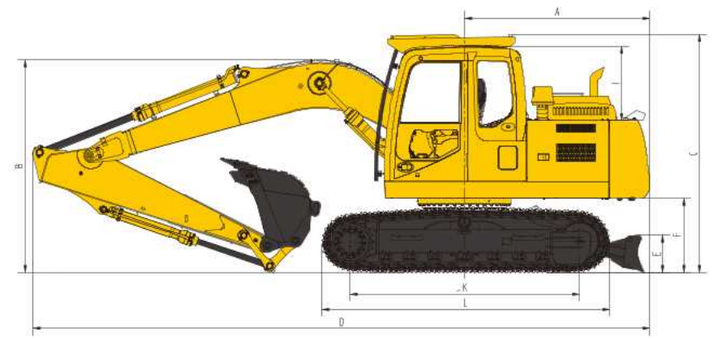

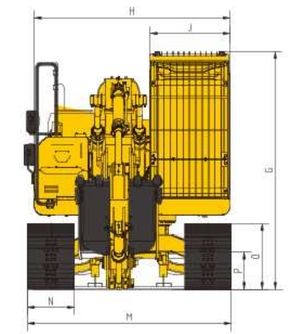

Dimensions

XE150E	One-piece boom
Boom length - mm	4600
Arm length - mm	2520
Bucket capacity - m³	0.65

A	Tail swing radius - mm	2290
B	Shipping height (boom) - mm	2852
C	Shipping height (Cab) - mm	3133
D	Shipping length - mm	7774
E	Dozer height - mm	467
F	Counterweight clearance - mm	940
G	Height over cab - mm	2882
H	Upper Structure width - mm	2490
I	Cab height above house - mm	766
J	Cab width - mm	1020
K	Tumbler distance - mm	2910
L	Track length - mm	3658
M	Undercarriage width - mm	2490
N	Shoe width std. - mm	500
O	Track height - mm	836
P	Ground clearance - mm	477

Digging forces (ISO)

XE150E	One-piece boom
Boom length - mm	4600
Arm length - mm	2520
Bucket capacity - m³	0.65
Bucket digging force (KN)	107
Arm digging force(KN)	80

Working Range

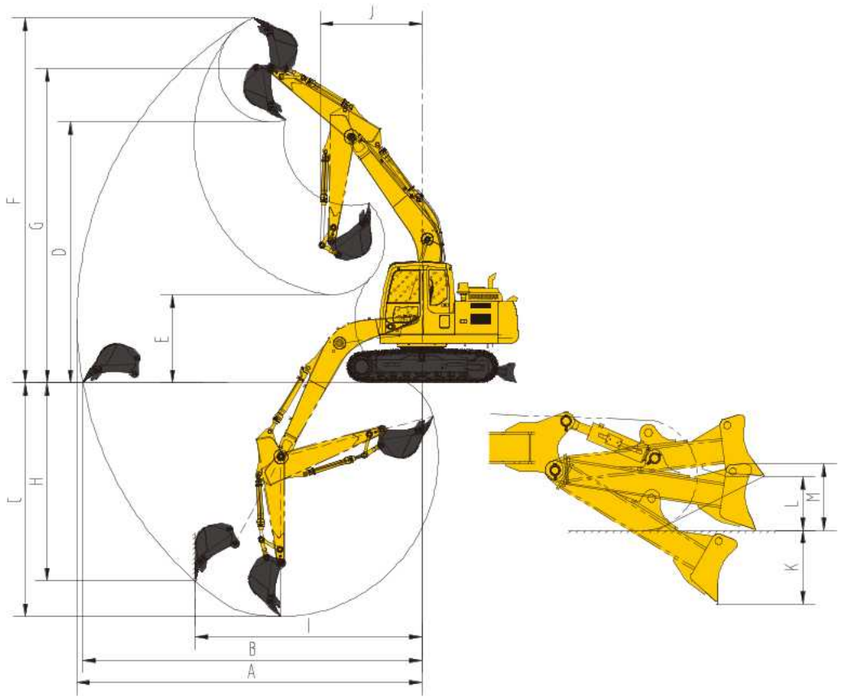

Working range

	XE150E	One-piece boom
	Boom length - mm	4600
	Arm length - mm	2520
	Bucket capacity - m³	0.65
A	Max. digging reach - mm	8295
B	Max. digging reach (ground) - mm	8155
C	Max. digging depth - mm	5535
D	Max. loading height - mm	6185
E	loading height - mm	2088
F	Max. digging height - mm	8630
G	Max. bucket pin height - mm	7449
H	Max. vertical wall depth - mm	4574
I	Max. radius vertical - mm	—
J	Min. swing radius- mm	2475
K	Maximum Blade depth - mm	540
L	Maximum Blade height - mm	385
M	Blade height - mm	467

Standard and Optional Equipment

Engine

AdBlue	●
Automatic preheating	●
Fuel-water separator with water level indication sensor	●
Fuel-water separator with heater (24V)	○
Axial seal air cleaner	●
Air prefilter	●
50℃ high temperature ambient cooling assembly	●
Dust screen for radiator	●
Fuel marker	●
Fuel-water quick release device	●
Fuel filling pump 50L/min	●
Fuel breather valve	●
Air filter service indicator	●
Auto-idle function	●

Hydraulic System

Auxiliary hydraulic valve	●
One & two way hydraulic line for hammer and thumb plier	●
Hydraulic quick coupler lines	●
Attachemnt tilting and rotating lines	●
Hydraulic oil ISO VG 46	●
Hydraulic oil ISO VG 32	○
Hydraulic oil ISO VG 68	○
Right proportional joystick with rocker switch (AUX1)	●
Left proportional joystick with rocker switch (AUX2)	●
Spare valve plate	●
Gauge pressure monitoring	●

Cab & Interior

Pressurized cab	●
Air suspension seat with heater	●
Control box	●
Rain visor	●
Front windshield divided 70/30 ratio	●
Double laminated windshield and other toughened windows	●
Sliding fold-in front window	●
Bi-directional air outlet air conditioner with defroster (automatic type)(pressurization function)	●
Color LCD capable of displaying warning information,filter / liquid replacement information and working hours	●
Travel control pedal with detachable manual control lever	●
Double stereo speaker	●
Cup holder	●
Coat hook	●
Floor mat	●
Retractable seat belt (51 mm (2") wide)	●
High and low travel speed switch	●
One-key boost mode	●
Reserve switch for working aids	●
Sunlight protection,roof	●
Top sunroof	●
Windshield wiper with intermittent feature	●
File packet	●
Hot and cool box	○
Rear window emergency exit	●
Hammer for emergency escape	●

Undercarriage

2x7 bottom roller	●
2x1 top roller	●
Bottom frame traction ring	●
500 mm (20") triple grouser track shoes	●
Protective device kit: undercarriage bottom sealing plate, travel motor sealing plate	●
600 mm (24") triple grouser track shoes	○
Track rubber block	○

Working device

Boom 4.6m	●
Arm 2.52m	●
0.65m3reinforced bucket	●

Electronic system

Battery (2x 750 CCA)	●
70A 24VDC generator	●
4.8 kW starter motor	●
24V cigarette lighter	○
12V cigarette lighter	●
5V USB interface	●
Engine stop switch in the cab	●
Rear-view camera	●
270°range image	○
AM-FM radio with digital display	●
Travel buzzer with switch	●
Beacon lamp	●
2 LED cab-mounted front lights	●
1 LED cab-mounted rear light	●
2 LED boom-mounted lights	●
12V power interface	○
Ceiling light	●

Counterweight

3.16 t counterweight	●

Lubrication system

Centralized lubrication greasing points	●

Safety

Driving door locks and cabin locks	●
Alarm horn	●
Quick-coupler switch with buzzer	●
Isolation plate between engine and oil pump chamber	●
Battery circuit breaker	●
Overheat alarm	●
Safety handrails and pedals	●
Anti-skid plate/ anti-skid paste	●
Hydraulic safety locking lever	●
Right and left rear-view mirrors	●
Counterweight rear-view mirrors	○
Safety valves for boom cylinders	●
Safety valve for arm cylinder	●
Roll over protective structure (ROPS)	●
Operator protective guard (OPG)	○
Safety net on the front lower windshield	●

Standard: ●
Optional: ○

· Some of this standard or optional equipment may not be available for certain markets.
· Pictures may include attachments and optional equipment that are not available in your area.
· Materials and specifications are subject to change without advance notice.
· Please contact your local XCMG dealer for more information on availability or to customize your machine to suit your applications requirements.

Optimum Services,XCMG Guaranteed

XCMG-approved attachments

Genuine parts

Extension of warranty

Financial solutions

Maintenance contract

Telematics

Professional Integrated Complete Solutions

The XCMG group has built a strong reputation based on the quality, reliability, and durability of its construction machinery. What's more, XCMG has gradually established a service network to constantly provide its local integrated and highly efficient complete solutions for all customers.

Full Range of Services Ready for you

In order to respond to your needs as fast as possible, XCMG experts are on their way to your job site from one of our facilities near you. A full range of services is available in order to reduce your total cost of ownership and increase your revenue.

XCMG Global Spare parts System

Mobile cranes

Excavators

Aerial work platforms

Wheel loaders

Road machinery