All Rights Reserved

Materials and specifications are subject to change without notice.
Featured machines in photos may include additional equipment. See your XCMG dealer for available options.

FOR YOUR SUCCESS

XCMG European Sales and Services GmbH
Address: Europark Fichtenhain B 4,47807 Krefeld, Deutschland
Tel: +49 (0) 2151 8206 890
Fax: +49 (0) 2151 8206 899
E-Mail: info@xcmg-ess.de

XUZHOU CONSTRUCTION MACHINERY GROUP IMP. & EXP. CO., LTD
Address: No.1, Tuolanshan Road, Xuzhou Economic Developing Zone, Jiangsu, China 221004
Tel: + 86(0) 516 8773 9703
Fax: + 86(0) 516 8773 9230
E-Mail: europe@xcmg.com

www.xcmg.com

Hydraulic Excavators
XE160WE

STAGE V COMPLIANT

Rated Power: 115 kW
Operating Weight: 15800 kg
Standard Bucket Capacity: 0.6 m³

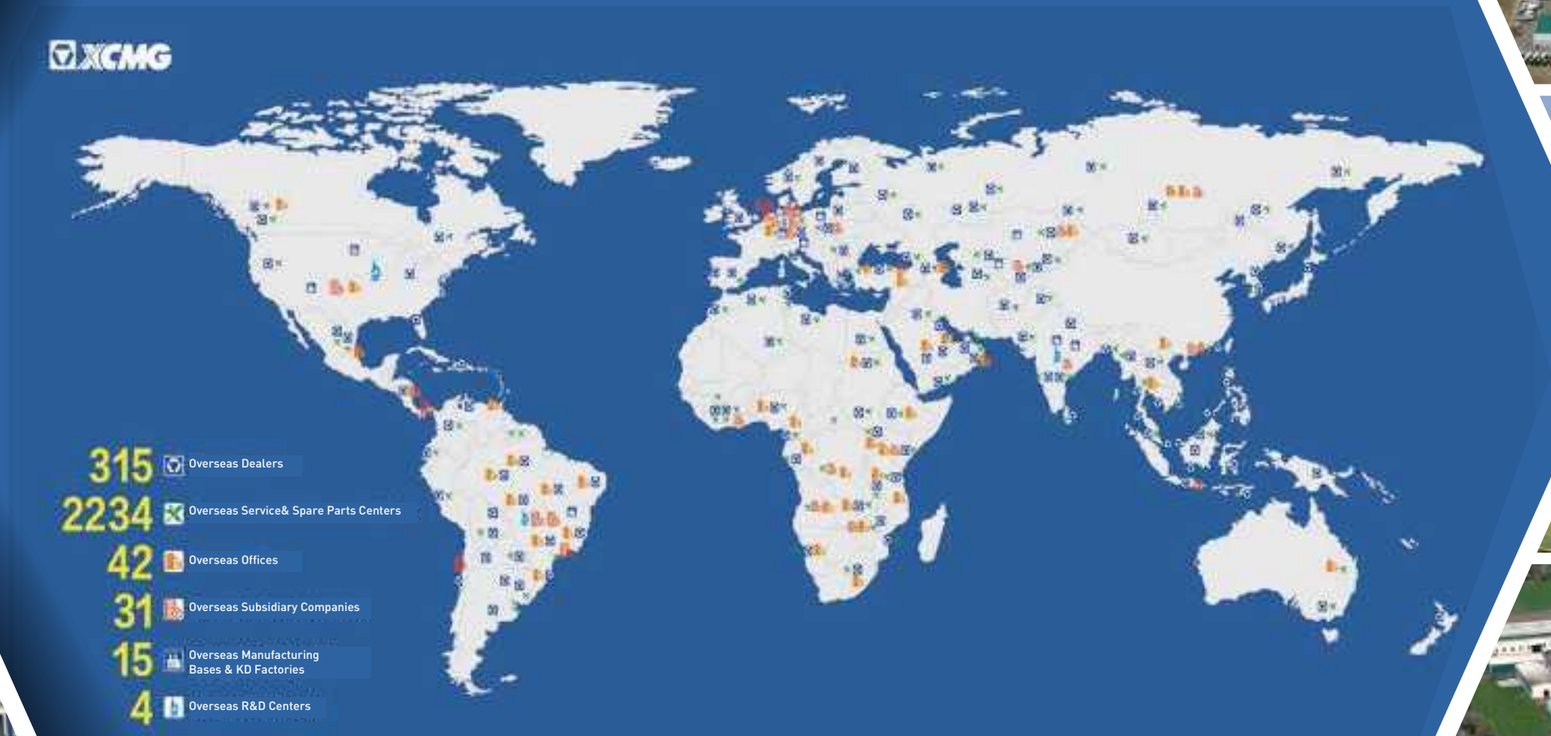

INTRODUCTION OF XCMG

XCMG, as a leading enterprise valued of 100 billion RMB, with the largest scale, the best technology level, the largest export volume, and high competitiveness and influence in China's construction machinery industry, has been occupying the first place in China's construction machinery industry for decades, and it now ranks the third in the world industry and the 395th among the world's top 500 brands.

The main products by XCMG consists of 16 categories of equipment such as hoisting machinery, excavation machinery, concrete machinery, mining machinery, earth-moving machinery and road machinery, etc., as well as three categories of key components such as hydraulic system, transmission system and electric control system. Among above-mentioned, hoisting machinery ranks first in the world, and package solution of road construction and maintenance machinery, piling machinery and concrete machinery are among the first-class bloc in the world.

XCMG has accumulated more than 8000 approved patents, including more than 1900 invention patents and more than 130 PCT international patents. Entities of R&D centers, manufacturing plants or KD factories are in operation in more than 10 countries such as Germany, the United States, Brazil and India, XCMG has also acquired three European enterprises including Schwing in Germany. The Brazil manufacturing plant, with an investment of 350 million dollars to build up factories on a bare ground, has become a model of economic cooperation between China and Brazil. At present, XCMG products are exported to 187 countries and regions, covering 97% of the countries along "The Belt and Road" area. In export business to 35 countries, XCMG's proportion ranks NO. 1, with a steady first place within Chinese industry in terms of annual export volume and overseas income.

XCMG IN EUROPE

Since 1990s when XCMG was already a known brand within the industry in Europe, XCMG has been one of the major international manufacturers supplying products and service across the Continent. With its rapid development in recent years, XCMG is gradually building up an all-round network including: R&D department; local distribution, supply chain management and an integrated customer services and training center.

At present, XCMG has 3 subsidiaries in operation, with more than 100 multinational employees in Europe:

-ERC XCMG European research center GmbH

-EPC XCMG European purchasing center GmbH

-ESS XCMG European sales and services GmbH

XCMG is also holding a resource of more than 100 branches by local dealers throughout the Europe, generating a whole value chain that is serving the entire European market, including sales, service, financing, used equipment recycle, etc.

We actively and continuously implement our globalization strategy. Our first-class international team has many years of professional experience and excellent cross-cultural management capability.

With a strong combination of expertise and practical experience in a multicultural context, we create real value and provide a high level of return on investment to our European customers.

XCMG XE160WE Stage V builds on its reputation from the previous series based on quality, reliability and durability. The enhancements deliver better fuel efficiency while not compromising on power, reducing emissions and consumption while increasing productivity.

If you want to get your work done with a durable brand, you can trust XCMG and look no further than our XE160WE.

RELIABILITY:
Even under the harshest conditions, XCMG has made its aim to build long-life products. XCMG has a long term relationship with the best component suppliers in the world. Cummins engines, Kawasaki hydraulic main pump/main valve/swing motor, and high-quality travel motor guarantee you the best performance. Ultra-sized cylinders in combination with long-life reinforced pins, polymer shims and bushings ensure best performance with unchanged durability.

PRODUCTIVITY AND EFFICIENCY:
Strong and unmatched bucket and arm digging forces give XE160WE the ability to fulfill the most challenging tasks on your jobsite with excellent productivity and efficiency.

SAFETY SOLUTIONS:
Standard equipped with rear and right side cameras, large side mirrors, powerful LED lighting, anti-slip steps and platforms and handrails for safe access to the upper structure. The ROPS (Roll Over Protective Structure) and the OPG (Operator Protective Guard) cabin ensures the operators' safety.

VERSATILITY:
Multiple boom and arm sizes together with special configurations are available which is capable fulfill any of tasks that customer requires.

EASY-TO-USE ATTACHMENTS:
Programmable auxiliary lines AUX1 (single and dual way) and AUX2 are provided to support your hydraulic attachments like grabs, shear, hammer, etc.

COMFORTABILITY:
In order to provide a comfort operation environment, we offer a spacious cab with low noise and vibration levels and excellent all-round visibility. Meanwhile, fully adjustable air suspension heated seat and air conditioner as standard.

CONTROLLABILITY:
8 attachments modes, proportional control with auser-friendly 8" TFT LCD color monitor.

STRONG POWER:
The Cummins B4.5 stage V engine is exceptionally powerful - with high torque at low revs. This makes that maximum flow is already available at low rpms with a fuel-efficient engine regime.

ADVANCED FILTRATION:
Easily accessible highly efficient filters and cleaners that remove all contaminations from your jobsite protect your investment in the best possible way.

SIMPLE AND EASY MAINTENANCE:
Easy access to all compartments. Maintenance data and signs are directly available from monitor.

UNDERCARRIAGE DURABILITY:
The CAE designed D-shape undercarriage enables even weight distribution, increases stability and durability, and prevents damage from rocks and debris.

Excellent Performance and Fuel Economy

Power without compromise

The XE160WE makes the operation tasks more efficient and comfortable.
Equipped with a new large diameter multi-way control valve, and Kawasaki hydraulic system. Valve element is further optimized to reduce internal pressure loss of the channel, improve maneuverability and efficiency of the composite operation.

POWER MATCH TECHNOLOGY

The XE160WE is equipped with a Cummins B4.5 engine. Famous for its excellent fuel efficiency, reliability and long service intervals it combines exceptional power output and high torque at low revs.
It meets EURO stage Ⅴ emission regulations. It achieves the best fuel injection control, improve combustion efficiency, and is more energy-saving and environmentally friendly.
Adopting pre-filter and high performance direct current air filter, air intake management, and innovative use of linear air flow path, gray scale is higher. Achieving longer service life of filter and longer maintenance cycle, and reducing replacement cycle of filter and overall maintenance costs.
XCMG' s wheeled excavator designed to reduce fuel consumption and increase your productivity. With advanced technology, save your time and cost.

FUEL ECONOMY TECHNOLOGY

- A choice between 8 working modes guarantees optimum performance under all conditions.
- Electronic control of fuel consumption.
- The auto-idle function reduces the engine speed when the controls are inactive for a preselected amount of time or when the safety lever is switched off. The engine will immediately return to its original selected speed when the operator touches the controls.
- For optimum cooling the fan speed is controlled by a viscous clutch that results in lower fan noise with better fuel efficiency.
- For increased fuel efficiency ECO mode turns on automatically, which reduces your fuel consumption while maintaining productivity.

Easy hydraulic maintenance:

- 2000/4000 hours of hydraulic oil replacement (depending on the hydraulic oil type)
- Replace the hydraulic oil return filter after 500 hours
- Replacement of the hydraulic oil suction filter element after 2000 hours

Less engine service:

- 500 hours engine diesel filter replacement
- 500 hours engine oil and filter replacement
- The long service intervals guarantees limited downtime.

First Choice for Comfort

The XE160WE cabin is designed to support increased productivity with a spacious comfortable operator environment. The pressurized cab is ISO-certified for your safety and offers a comfortable heated fully adjustable suspension seat with several storage compartments and a clear all-round view of your jobsite. The reduced noise and vibration levels with automatic air-conditioning will make your work day easier and comfortable.

Safety
Cab with ROPS can be equipped with top protection, front protection, side protection to meet anti-falling requirements, and thus to further improve cab safety.

Advanced control technology
Ergonomic, advanced and simple-to-operate proportional joystick delivers ultra-precise and smooth control over all movements. The orientation of the joystick's rollers and buttons are adjustable.

Air conditioning
High-power cold and warm air-conditioning, equipped with multi-channel stereo air supply system and advanced sound system, it is convenient and comfortable for all kinds of operation at your fingertips.

Integrated and centralized electrical system control
Concise design and reliable system. Electrical plug-in components with the world's first-class quality reaches the waterproofing grade of IP56 and are more reliable.

HMI
All machine interfaces – including the joysticks, keypad and LCD monitor – are ergonomically positioned and designed for optimum control and efficiency. For operator convenience and ease of use, the number of switches has been significantly reduced.

Cab suspension
High-performance silicone oil shock absorber with internal damping spring will effectively isolate shock waves in specific frequency bands for improved comfort.

8-inch LCD
8-inch color LCD display has higher resolution, larger viewing angle, optimized display interface, and its style is more in line with the application environment. Equipped with one-click fault inquiry and other functions, the operation is more convenient, and there is more monitoring information which can ensure better operation of the machine.

1. Spacious operator's space
2. Large travelling pedal
3. Heated air suspension seat
4. Power outlet
5. Throttle dial
6. All around AC and heating
7. (Bluetooth) AM/FM radio
8. Proportional hydraulic joysticks
9. High quality speakers
10. Hammer control pedal
11. Color LCD monitor
12. Storage compartment (1 out of 7)
13. Safety lever
14. Cup holder

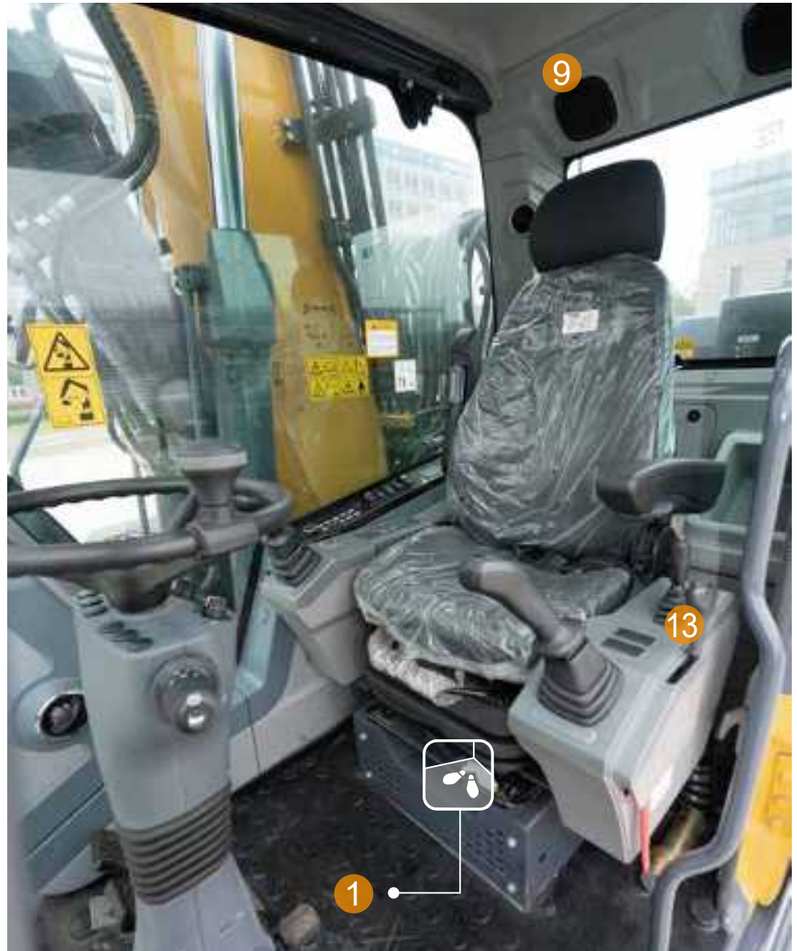

Simple and Easy Control

Machine interfaces

All machine interfaces – including joysticks, keypad, panel, and larger LCD monitor – are ergonomically designed for optimum control and efficiency, resulting in increased productivity and workplace wellbeing. The switches have been simplified and climate control is now integrated into the keypad for easy adjustments.

•The new multi-function 8" LCD monitor displays a comprehensive range of useful technical information, allowing you to check the machine's status and settings at a glance.

•Highly sensitive and low-effort joysticks and clear convenient controls enable you to work smooth and safely with minimum effort for increased comfort and efficiency.

•The newly adjustable proportional auxiliary functions support precise and smooth control of your attachments.

INTELLIGENT MONITOR

The upgraded 8" TFT monitor features a day and night display with full-user access to the machine settings and maintenance data. Any abnormality is clearly displayed on the screen, allowing you to work safely and confident with an accurate overview of all conditions.

1 Energy saving icon
2 Travel speed
3 Automatic idle
4 Power boost
5 Work mode
6 Mode and gear
7 Notification icon
8 Fault description
9 Camera
10 Coolant temperature
11 DEF/AdBlue gauge
12 Main interface set
13 Mute button
14 Menu
15 Breaking oil pressure gauge
16 Fuel gauge
17 Gear indicator
18 Fault code area
19 Hour meter

RICH INSTRUMENT INFORMATION:

All-important data can be directly monitored from the main screen.

Engine coolant and hydraulic oil temperature, fuel level, mode state, Adblue content, working time, average fuel efficiency (advanced setting), etc.

3 POWER MODES AND 8 ATTACHMENT MODES

N: Normal mode
P: Power mode
T: Plateau mode
ATT1: Breaker mode
ATT2: Shell bucket rotating mode
ATT3: Auxiliary mode
ATT4: Auxiliary mode
ATT5: Auxiliary mode
ATT6: Auxiliary mode
ATT7: Auxiliary mode
ATT8: Auxiliary mode

Pre-cleaner

Pre-cleaner:

Air filter life and engine efficiency are directly related to the amount of debris ingested through the engine's air intake. Therefore, the pre-cleaner (as standard) is the first stage of an air intake system that prevents entry of the majority of heavier-than-air particles.

Reliability

Designed for long-term robustness and safety

XCMG has developed one of the most rigorous strength and reliability testing procedures, The XCMG E-series features durability under the most extreme conditions and is therefore one of the most popular brands in its home market.
We continually manufacture the most durable machines in order to reduce the cost of ownership. The robust upper frame, undercarriage structure, and front attachments show their real value in tough working conditions and guarantee higher productivity.

REINFORCED DURABILITY OF THE D-CHASSIS

The D-shaped undercarriage has a higher durability than demanded on the jobsite, as proven through numerous tests including road tests and virtual simulation.

HI-GRADE (HIGH-PRESSURE)HOSES

The E-series uses a new type of high-pressure hoses with improved heat and pressure resistance to increase the durability of the machine.

STRENGTHENED BOOM AND ARM

FEA has been used to calculate the best load distribution throughout the machines structure. For better protection of the base of the arm, reinforced bars have been added. The arm structure has been strengthened for the roughest conditions.

UNDERCARRIAGE DURABILITY WITH EASY MAINTENANCE

Chassis is parallel with dozer blade and auxiliary stabilizing outriggers: Dozer blade is designed to maintain the machine's stability

Excellent driving performance: With high/low/slow gears provided, the vehicle can adapt to complex terrain with its super high traction

PRODUCTION EFFICIENCY:

Two-piece boom working device and a variety of optional attachments can maximize the utilization rate of equipment

Maintenance

Excellent serviceability

Our machines are designed for simple routine maintenance, while skilled XCMG technicians are available to provide extra support if needed. To get the most out of your machine, choose the package you need from a broad range of service agreements. Uptime, productivity and residual value are all maximized, making the XE160WE an economical and rewarding choice.

Simple and easy maintenance

•Complete your daily machine checks entirely from the ground, minimizing the need to access the upper platform.
•A large guard rail is installed along with anti-slip steps and plates, for safer and easier access to the upper structure
•The cab' s air-conditioning filter is lockable and placed on the cab's side for easy access
•A battery cut-off switch to easily disconnect the battery for jobsite required safety measures.
•Shut-off valves on the pre-filter piping line and the fuel tank drain piping makes servicing easier and prevents pollution from leakage.
•The engine parts can be reached easily via the top and side panels
•For extra accessibility and servicing convenience, all filters (engine oil filter, fuel pre-filter, fuel filter and hydraulic pilot filter) are located in the pump compartment.

Pre-start monitoring system

The XE160WE has a pre-start monitoring system that shows you coolant temperature, hydraulic oil temperature, engine oil pressure, fuel levels and AdBlue® level. It will also show fluid and filter intervals to keep the machine in top performing condition.

Proactive maintenance solutions

•Routine maintenance: your dealer will support you with routine service at regular intervals.
•Genuine parts: manufactured and tested to ensure long lifetime of your machine.

SCR tank and easy diesel filling

The ECU (Engine Control Unit)monitors with sensors the AdBlue® system and warms the operator for potential system malfunctions. Fuel filler pump, an on-board pump system, lets you fill your fuel tank quickly from an external source (like a fuel drum) – the system stops automatically when the fuel tank is full or the fuel source is empty.

Centralized lubrication greasing points

Electrically centralized lubrication makes daily maintenance easier and more convenient

New Cooling System with Increased Air Flow

The lubrication points of the working equipment adopts the self-lubricating bearing with ultra-long lubrication periods and is centrally arranged to make lubrication easier. Specially the optional electric automatic lubrication system cover all lubrication points of work devices and swing bearing.

Technical Specifications

Engine

Designed to deliver superior performance and fuel efficiency, the Cummins Stage V diesel engine fully meets the emissions regulations. To optimize machine performance, the engine uses high-pressure fuel injectors, aVGT ™ turbocharger inter-cooler, and electronic engine controls. 4-cycle water-cooled, turbocharged, Exhaust Gas Recirculation (EGR) and/ Selective Catalytic Reduction (SCR) without aDiesel Particulate Filter (DPF).

	XE160WE
Model	Cummins B4.5
No. of Cylinders	4
Rated Power at 2000 rpm	
(SAE J1995)	115 kW (154 hp) at 2000 rpm
(SAE J1349)	—
(ISO 9249)	—
Max. torque at 1200 rpm	712 N-m (525 lb-ft)
Piston Displacement	4.5L (275 in³)
Four Stroke	√
Batteries - Alternator	2 × 12 V, 100 Ah -24 V / 70 A
Air Filter	"Donaldson's the latest PSD air filter and pre-filtered dust separator"

Chassis system and shield

Extremely robust construction throughout - made of high-quality, durable materials, with all welded structures designed to limit stresses.
The machine's forward, neutral, reverse and high/low gears are located on the right joystick side, which is in line with the operation habits of road equipment, and has CCS cruise control and slowdown functions. Three-stage front axle swing control mode (on/off/auto) can provide better driving performance in terms of operating conditions. High-quality gearboxes and heavy-duty axles ensure that the drive system is more suitable for the application of wheeled excavators in complex environments. Wheel brake system makes machine braking more efficient.

	XE160WE
Front Drive Axle With Steering	√
Rear Rigid Drive Axle	√
10.00-20 Tire	4
Outrigger And Dozer Blade With Guard	√

Hydraulic system

The XICS (XCMG Intelligent Control System) is the brain of the excavator - minimizing fuel consumption and is enabling the efficiency of the hydraulic system to be optimized for all working conditions. To harmonize the operation of the engine and the hydraulics, the XICS is connected to the engine's electronic control unit (ECU) via a data transfer link.

- The hydraulic system enables independent and combined operations-3-speed travel offers either increased torque or high travel speed
- Cross-sensing pump system and auto-deceleration system improves fuel efficiency.
- 3 power modes and 8 working modes, -flow and pressure control of auxiliary hydraulic circuits from the control panel
- Computer controlled pump flow control

Pump flow and system pressure

	XE160WE
Main Pumps, Type:	"Kawasaki variable displacement axial piston pumps"
Rated Flow Of Main Pump	2 × 160 l/min
Main Safety Valve Pressure	34.3/37 MPa
Travel System Pressure	37 MPa
Swing System Pressure	25 MPa
Pilot System Pressure	3.9 MPa

Main performance

	XE160WE
Travel speed	20/10/2.8 km/h
Swing speed	11.5 r/min
Gradeability	≤30°
Ground Pressure	48.9 Kpa
Bucket Digging Force	120 kN
Arm Digging Force	86 kN
Maximum Tractive Force	97 kN

Fluid Capacities

	XE160WE
Fuel tank	250 L
Hydraulic oil tank	118 L
Engine oil	11 L

Lifting Capacities

5350mm hydraulic two- piece boom, 2520mm arm with 1800kg counterweight

:Rating over-front : Rating over-side or 360 degree

Load point height	Undercarriage stabilized		3.0 m		4.5 m		6.0 m		7.5 m		Max. reach Capacity	Max. reach Capacity	Max. reach Reach
	Rear	Front											M
7.5m					*3452	*3452					*2443	*2443	4.85
	Blade	Outriggers			*7954	*7954					*5374	*5374	4.85
6.0m					*3741	*3741	*2957	*2957			*2068	*2068	6.21
	Blade	Outriggers			*8230	*8230	*6504	*6504			*4549	*4549	6.21
4.5m					*4272	*4272	*3907	*3907			*1934	*1934	7.01
	Blade	Outriggers			*9398	*9398	*8596	*8596			*4256	*4256	7.01
3.0m					*5249	*5249	*4286	*4286			*2029	*2029	7.42
	Blade	Outriggers			*11547	*11547	*9430	*9430			*4464	*4464	7.42
1.5m					*6242	*6242	*4740	*4740	*1968	*1968	*1968	*1968	7.5
	Blade	Outriggers			*13732	*13732	*10429	*10429	*4329	*4329	*4329	*4329	7.5
Ground					*6815	*6815	*5048	*5048			*2115	*2115	7.28
	Blade	Outriggers			*14993	*14993	*11105	*11105			*4653	*4653	7.28
-1.5m			*7157	*7157	*6780	*6780	*4979	*4979			*2433	*2433	6.72
	Blade	Outriggers	*15746	*15746	*14916	*14916	*10954	*10954			*5353	*5353	6.72
-3.0m					*5744	*5744					*3204	*3204	5.72
	Blade	Outriggers			*12637	*12637					*7050	*7050	5.72

: Over front
: Over side or 360°

1.Lifting capacities are based on SAE J1097 and ISO 10567.
2.Lifting capacity does not exceed 75% of tipping load with the machine on firm level ground or 87% of full hydraulic capacity.
3.The lift point is located at the lifting eye of the arm.
4.* indicates load limited by hydraulic capacity.

Do not attempt to lift or hold any load that exceeds rated load capacity at the specified lift radius and height.

Dimensions

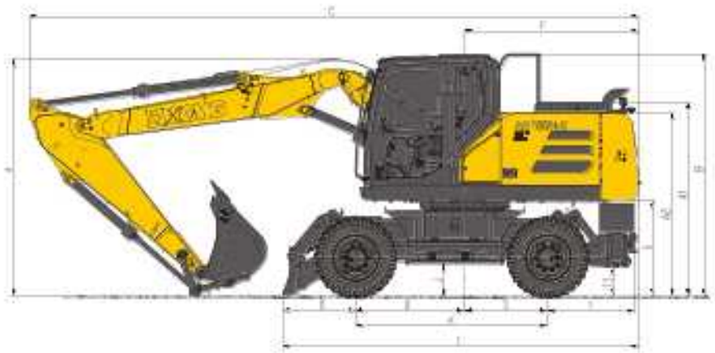

Dimensions

	XE160WE	Two-piece boom
A	Overall Height (Boom) - mm	3132
B	Overall Height (Guardrail) - mm	3208
C	Overall Length - Mm	8085
D	Overall Width Of Undercarriage - mm	2550
E	Overall Width Of Superstructure - mm	2490
F	Tail Slew Radius - mm	2310
G	Counterweight Clearance - mm	1262
H	Height Over Cab - mm	3195
I	Undercarriage Length - mm	4723
J	Undercarriage Clearance - mm	424
K	Wheel Base - mm	2550
L	Tread - mm	1943
M	Outrigger Width (Front Or Rear)	3266
N	Travel Height - mm	4000
N1	Travel Length - mm	6388
N2	Distance Of Steering Wheel To Front - mm	3080
A1	Engine Cover Height - mm	2563
A2	Counterweight Height - mm	2424

Working Range

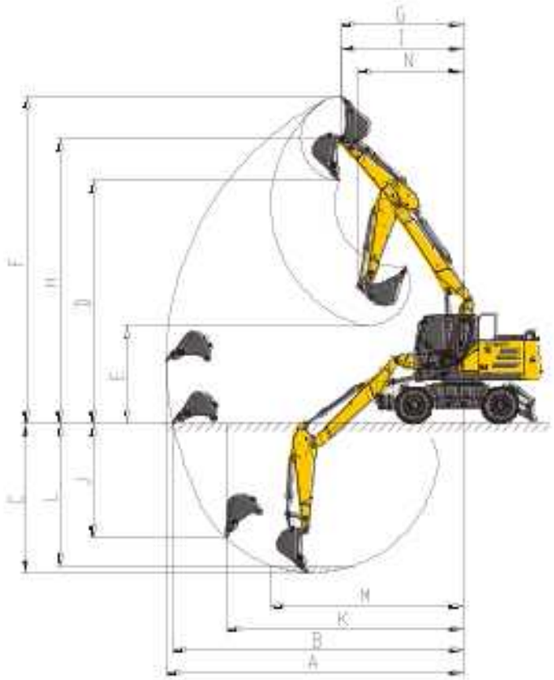

Working range

	XE160WE	Two-piece boom
	Boom Length - mm	1850+3500
	Arm Length - mm	2520
	Bucket Capacity - m³	0.6
A	Max. Digging Reach - mm	8752
B	Max. Digging Reach (Ground) - mm	8552
C	Max. Digging Depth - mm	4385
D	Max. Loading Height - mm	7163
E	Min. Loading Height - mm	2888
F	Max. Digging Height - mm	9626
G	Max. Digging Radius - mm	3583
H	Max. Bucket Pin Height - mm	8393
I	Max. Bucket Pin Radius - mm	3554
J	Max. Vertical Wall Digging Depth - mm	3373
K	Max. Vertical Wall Digging Radius - mm	6965
L	Max. Digging Depth (8´level) - mm	4180
M	Min. Digging Radius (8´level) - mm	5642
N	Min. Swing Radius - mm	3089

Standard and Optional Equipment

Engine

Model	B4.5
Emission standard stage	V
Ad Blue	●
Automatic preheating	●
Coolant heater (fuel type)	○
50°C high temperature ambient cooling assembly	●
Auto idle	●
Fuel-water separator with water level indication sensor	●
Fuel-water quick release device	●
Fuel-water separator with heater (24V)	○
Radial seal air cleaner	●
Air pre-filter	●
Radiator dust screen	●
Lockable fuel tank cover	●
Fuel marker on LCD	●
Fuel filling pump	●
Quick release bottom output for fuel tank	●
Engine monitor	●
Air pressure difference indicator	●

Hydraulic System

variable piston pumpArmrest variable piston pump*2+steering and braking gear pump*2+pilot gear pump*1	●
Negative flow control main valve + hydraulic pilot system	●
Boom/arm flow regeneration	●
Boom/Arm/Bucket Cylinder Cushion Valves	●
Reverse rotation damping valve	●
Left/Right electric proportional joystick with 1 slider	●
One-button booster switch (right handle)	●
safety lever	●
Pressure Test Fittings/Sensor	●
Gauge pressure monitor	●
Auxiliary hydraulic valve	●
Single/Dual way pipelines(pressure and flows changeable)	●
Dual way pipelines for rotator	●
Oil-return pipeline	●
Auxiliary attachment management system (attachment settings)	●
Medium pressure quick coupler line (PTO pump)	●
Hydraulic oil ISO VG 46	●
Hydraulic oil ISO VG 32	○
Hydraulic oil ISO VG 468	○
Oil sample valve for periodic liquid testing (quick oil drain at bottom of hydraulic tank)	●
Spare valve plate	●

Safety and security configuration

Driver's door lock and each compartment lock	●
Alarm horn	●
Alarm button for quick coupler	●
Isolation plate between engine and oil pump chamber	●
Battery disconnect switch	●
Overheat alarm	●
Safety Handrails and Pedals	●
Anti-skid plate / anti-skid sticker	●
Hydraulic safety locking lever	●
Left rear view mirror (Manual adjustment)	●
Right rear view mirror (Manual adjustment)	●
Bottom-Boom cylinder explosion-proof valve	●
Arm cylinder explosion-proof valve	●
Upper-Boom cylinder explosion-proof valve	●
Overload alarm device	●
ROPS	●
Top protection guard（TOG)	○
Front protection guard（TOG)	○
Upper Front windshield protective net	○

Chassis system and shield

Steering wheel with emergency steering	●
Hydrostatic drive with 2-speed power shift transmission	●
Parking brake	●
Dig Axle Lock	●
Heavy-duty axle with oscillating front axle	●
Travel damping cylinder	●
Lockable toolbox	●
Towing trailer hitch reserved mount	●
Bulldozer blade and outrigger position interchangeable device	●
Front and rear outriggers 2×2	○
Bulldozer and Outrigger Cylinder Retention Valves/Protectors	●
Front and rear fenders 2×2	○
Right foot accelerator pedal to control driving speed	●
10.00-20-16PR Tire	●
9.00-20-14PR Tire	○

Working device

Bottom boom 1850mm + upper boom 3500mm	●
Arm 2520mm	●
0.6m³(1063mm)General Purpose Bucket	○
4600mm Boom	○

Cab & Interior

Pressurized cab with fresh air system	●
Fabric Air Suspension Seat with Heated function	●
Height adjustable headrest	●
51mm retractable seat belt	●
Seat belt reminder(if not fastened)	○
Left/right control box with manual height and angle adjustment	●
Height adjustable armrest	●
70/30 split front windshield	●
Removable front lower window and pull-up front upper window	●
Tempered glass	●
Sliding upper window of door	●
Intermittent three-speed wiper	●
Openable large sunroof	●
Cab rain cover (can not be configured with front and upper protective guard)	●
Sunshade shutter	●
Rear window emergency exit	●
Emergency escape hammer	●
Automatic air conditioner with adjustable air outlet direction with defroster	●
Multiple storage spaces	●
Hot and cold box	●
File holder	●
Cup holder	●
Washable floor mats	●

Counterweight

1800kg	●

Lubrication system

Working equipment centralized lubrication system	●
Electric automatic lubrication system (covering working device + slewing bearing)	○

Standard and Optional Equipment

Lighting lamp

Travel and swing buzzers that can be set on the LCD	●
Rotary beacon that can be set on the LCD	●
LED Light Cab-top front 2	●
LED Light Cab-top rear 1	●
LED Light on Working equipment 2	●
LED Light Counterweight 1	●
Swing platform light 2	●
Cab interior light several	●
2100mm Arm	○
0.7m³(1250mm) Earthmoving Bucket	○
0.3m³(500mm)Earthmoving Bucket	○
Miller Quick Coupler with CE	○
XCMG Breaker with CE	○

Electronic system

Battery（2 ×750 CCA）	●
70 A Alternator	●
24V/4.8 kW Starter motor	○
12V Power interface	●
24V Backup power	○
5V USB port	●
Main power switch	●
Key start switch	●
Engine Anti-Restart System	●
Ground-operated engine stop switch	●
Engine speed knob	●
Power mode（N/P/T/B）	●
Jogging mode	●
Electric reversing switch	●
Height and angle adjustable steering column	●
Right camera	●
Rear camera	●
270° Field of view (add left camera)	○
Meter display channel for AM-FM radio	●
DAB radio	○
2 stereo speakers	●
8 inch LCD	●
LCD display diagnostic function	●
Diagnostic Communication Port	●
Knob function selection panel	●
Work aids reserved switch	●

Standard: ●
Optional: ○

· Some of this standard or optional equipment may not be available for certain markets.
· Pictures may include attachments and optional equipment that are not available in your area.
· Materials and specifications are subject to change without advance notice.
· Please contact your local XCMG dealer for more information on availability or to customize your machine to suit your applications requirements.

Optimum Services,XCMG Guaranteed

XCMG-approved attachments

Genuine parts

Extension of warranty

Financial solutions

Maintenance contract

Telematics

Professional Integrated Complete Solutions

The XCMG group has built a strong reputation based on the quality, reliability and durability of its construction machinery. What's more, XCMG has gradually established a service network to constantly provide its local integrated and highly efficient complete solutions for all customers.

Full Range of Services Ready for you

In order to respond to your needs as fast as possible, XCMG experts are on their way to your job site from one of our facilities near you. A Full range of services is available in order to reduce your total cost of owner- ship and increase your revenue.

XCMG Global Spare Parts System

Mobile cranes

Excavators

Aerial work platforms

Wheel loaders

Road machinery