All Rights Reserved

Materials and specifications are subject to change without notice. Featured machines in photos may include additional equipment. See your XCMG dealer for available options.

FOR YOUR SUCCESS

XCMG European Sales and Services GmbH
Address: Europark Fichtenhain B 4,47807 Krefeld, Deutschland
Tel: +49 (0) 2151 8206 890
Fax: +49 (0) 2151 8206 899
E-Mail: info@xcmg-ess.de

XUZHOU CONSTRUCTION MACHINERY GROUP IMP. & EXP. CO., LTD
Address: No.1, Tuolanshan Road, Xuzhou Economic Developing Zone, Jiangsu, China 221004
Tel: + 86(0) 516 8773 9703
Fax: + 86(0) 516 8773 9230
E-Mail: europe@xcmg.com

www.xcmg.com

XS-Series Single Drum Compactors

XS115/XS125/XS135/XS165

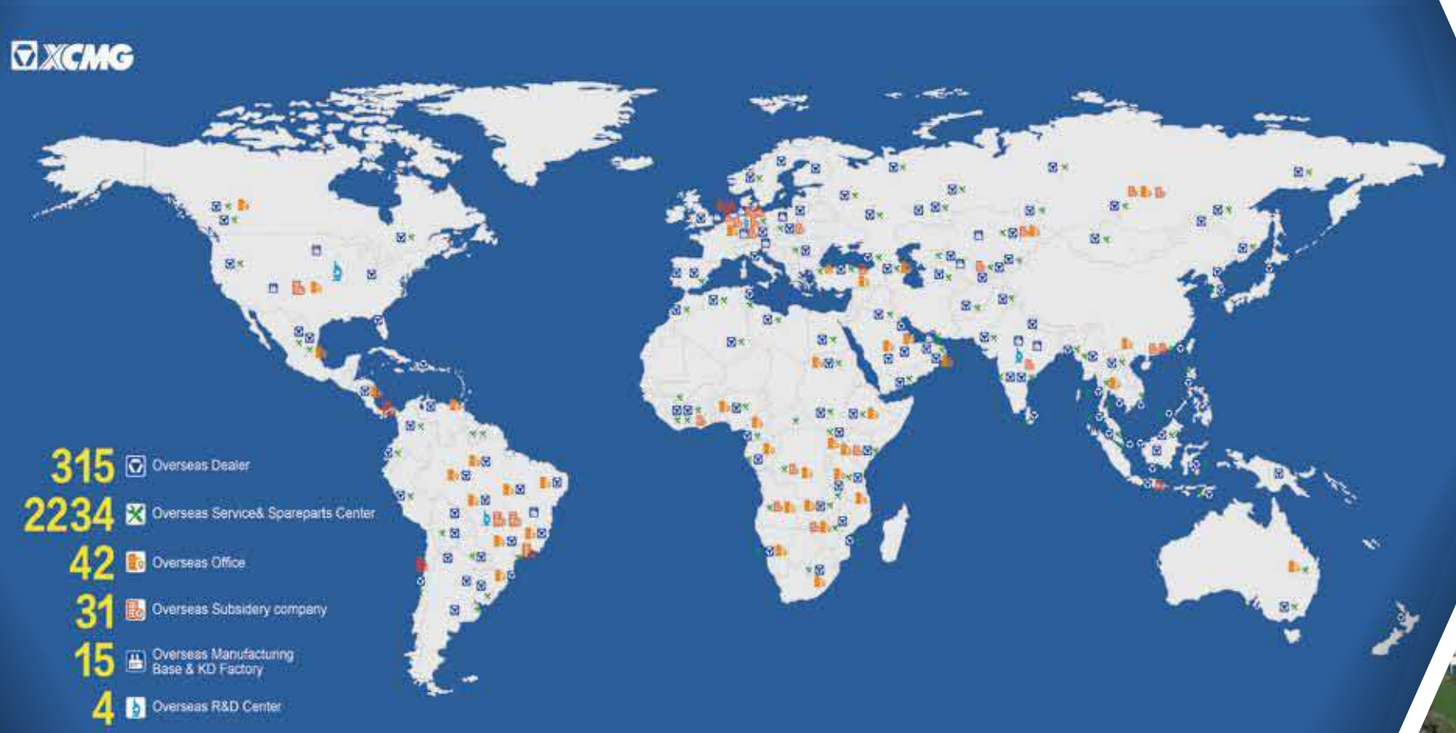

INTRODUCTION OF XCMG

XCMG, as a leading enterprise valued of 100 billion RMB, with the largest scale, the best technology level, the largest export volume, and high competitiveness and influence in China's construction machinery industry, has been occupying the first place in China's construction machinery industry for decades, and it now ranks the third in the world industry and the 395th among the world's top 500 brands.

The main products by XCMG consists of 16 categories of equipment such as hoisting machinery, excavation machinery, concrete machinery, mining machinery, earth-moving machinery and road machinery, etc., as well as three categories of key components such as hydraulic system, transmission system and electric control system. Among above-mentioned, hoisting machinery ranks first in the world, and package solution of road construction and maintenance machinery, piling machinery and concrete machinery are among the first-class bloc in the world.

XCMG has accumulated more than 8000 approved patents, including more than 1900 invention patents and more than 130 PCT international patents. Entities of R&D centers, manufacturing plants or KD factories are in operation in more than 10 countries such as Germany, the United States, Brazil and India, XCMG has also acquired three European enterprises including Schwing in Germany. The Brazil manufacturing plant, with an investment of 350 million dollars to build up factories on a bare ground, has become a model of economic cooperation between China and Brazil. At present, XCMG products are exported to 187 countries and regions, covering 97% of the countries along "The Belt and Road" area. In export business to 35 countries, XCMG's proportion ranks NO. 1, with a steady first place within Chinese industry in terms of annual export volume and overseas income.

XCMG IN EUROPE

Since 1990s when XCMG was already a known brand within the industry in Europe, XCMG has been one of the major international manufacturers supplying products and service across the Continent. With its rapid development in recent years, XCMG is gradually building up an all-round network including: R&D department; local distribution, supply chain management and an integrated customer services and training center.

At present, XCMG has 3 subsidiaries in operation, with more than 100 multinational employees in Europe:

-ERC XCMG European research center GmbH

-EPC XCMG European purchasing center GmbH

-ESS XCMG European sales and services GmbH

XCMG is also holding a resource of more than 100 branches by local dealers throughout the Europe, generating a whole value chain that is serving the entire European market, including sales, service, financing, used equipment recycle, etc.

We actively and continuously implement our globalization strategy. Our first-class international team has many years of professional experience and excellent cross-cultural management capability.

With a strong combination of expertise and practical experience in a multicultural context, we create real value and provide a high level of return on investment to our European customers.

Highlights

The XS 125 / XS 125 PD Heavy Duty Single Drum Rollers are challenging the global markets, equiped with engines meeting up to EU-Stage V emission requirements. Its high installed engine power together with the large dynamic force, the high compaction efficiency and the outstanding performance put them among the most suitable equipment for all earth compacting jobs.

Design

The XS125 is the first model of the new Series 5 Single Drum Rollers. It combines compactness with high maneuverability and excellent all around visibility.
The engine compartment is under the wide, electrohydraulically lifting hood. Most regular maintenance points are accessible from ground and it offers a central point for measuring hydraulic pressure.
The cabin is hydraulically tillable enhancing the access to the main hydraulic pumps.

Configuration

The XS125 Single Drum Rollers are available in multiple configurations of wheels, drums and drum-shells.

Propel

The hydraulic driven front and rear axle are electronically controlled. The X-ASC traction control system ensures availability of superior performance even at the machines limits.
The Work-Mode with its adjustable Speedlimiter allows precise work and the Transport-Mode fast and simple relocation.

Vibration

The Vibration Drive System performs accurate with two frequencies and two amplitudes. The roller can be applied in all compaction jobsites – in combination with the adjustable Speedlimiter in Work-Mode the number of impacts per meter can deliver a constant compaction output.

Safety

ROPS & FOPS Cabin

The large comfortable ROPS & FOPS Cabin is equipped with a comfort suspension seat and offers excellent all around visibility. For convenience it is in series equipped with aircondition and radio.

The seat is equipped with seat occupation switch and a seat belt.

Brake System

The roller is equipped with three brake systems: services brakes, parking brakes and secondary brakes acting at the drum and at the rear axle.

Traction

The XS125 mass distribution between the axles is nearly perfect. It is equipped with sufficient power reserve, an efficient hydraulic propel system and a NO-SPIN drive axle. XCMG's unique automatic X-ASC traction control system is implemented as a standard. This allows the maximum possible torque to take effect on the ground.

With the high clearance, the rollers can overtake nearly all grounds.

PRODUCT HIGHLIGHTS

Environmental protection and fuel economy

The XS125/XS125PD Single Drum Rollers are equipped with powerful four-cylinder, turbo-charged, water-cooled engines meeting up to EU-Stage V emission requirements.
The build-in ECO mode and the variable speed fan enhances fuel economy, reduces wear on machines power train system and reduces noise emissions.

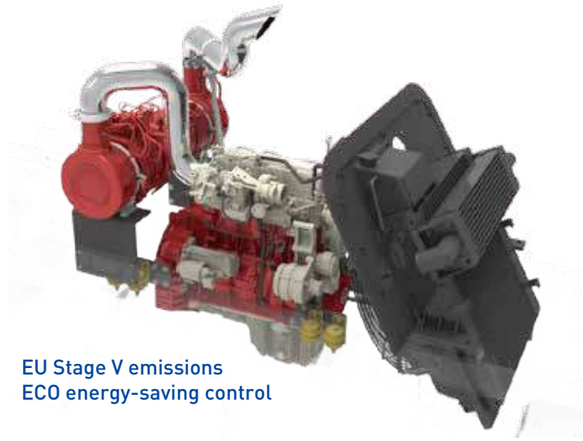

EU Stage V emissions
ECO energy-saving control

Maintenance & Diagnostics

The XS125/XS125PD are equipped by an electrohydraulic powered engine hood. As many as possible points subject to regular maintenance are accessible from ground.
Hydraulic filters, engines air intake filter and fuel water separator are electronically observed, thus they need only maintenance on demand.
Beside fault codes, the display indicates also the typical regular maintenance tasks when related maintenance period elapses.
The cabin is also hydraulically tiltable, providing access to conduct repairs if necessary.

Operators environment

The cabin is equipped with a comfort seat, radio, air-condition with filtered fresh air supply and offers a reasonable large operators envelope; it is equipped with large windows for best all-around view and despite the slim columns it offers the full ROPS protection.

1. The ROPS&FOPS Cabin provides sufficient space while ensuring safety.
2. Large windshield curved window provides wide view.
3. Air-conditioning as standard; variable ventilation allows individual air-flow adjustment.
4. Filtered fresh air supply system as standard.
5. Cabin with interior overhead lamps.
6. Emergency hammer with integrated belt cutter.
7. Ergonomically arranged operating elements around the comfort, shock-absorbing seat. The seat offers a plurality of adjustment possibilities and large elbow freedom over the armrests.
8. Cup/bottle holders, mobile phone storage position etc. to place small items while working.
9. Rear window electric defrosting device.
10. Rear window sunshade as standard.
11. Adjustable steering column for comfort enhancement.

Whole Machine

13. Blue colored steps and handles to access cabin.
14. Hydraulic hose protection for additional safety layer in case on hose rupture.
15. Cab three-layer vibration damping for convenient work.
16. The whole system is equipped with work lights, direction indicators and rotating beacon light as standard.
17. External jump-start socket.
18. Maintenance-free battery.
19. Maintenance-free steering bearing.
20. Assembly type articulation, easy to replace the cross articulated ends of the joint bearings.
21. Large fuel tank.

DIMENSIONS

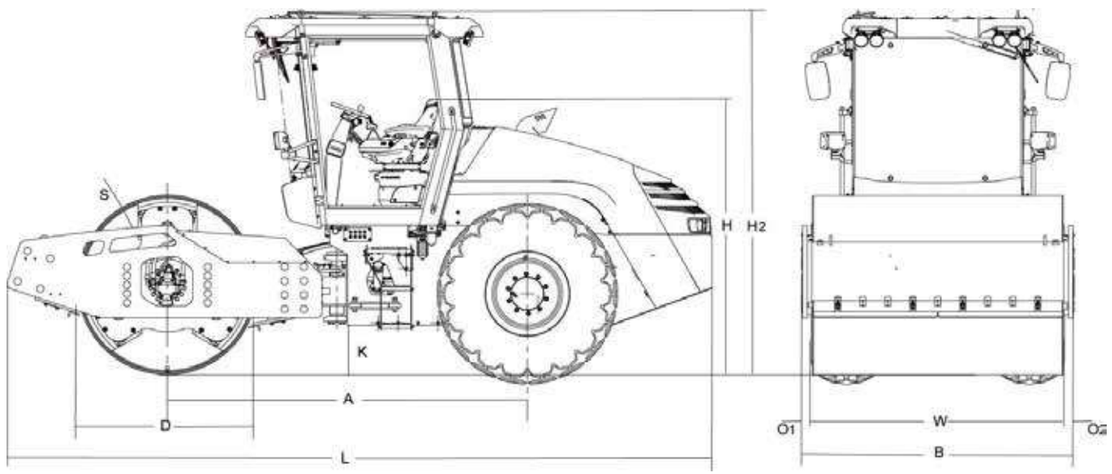

Dimensions (mm)	A	B	D	H	H2	K	L	O1	O2	S	W
XS115	3060	2300	1523	2340	2990	417	5990	85	85	25	2130
XS125	3060	2300	1523	2340	2990	417	5990	85	85	25	2130
XS135	3060	2300	1533	2340	2990	417	5990	85	85	25	2130
XS165	3060	2300	1523	2390	3040	467	6010	85	85	30	2130

PARAMETERS

	unit	XS115	XS125	XS135	XS165
Maximum operating mass	kg	11400	12400	13400	16400
Operating mass CE/CE	kg	11000	12000	13000	16000
Front axle load	kg	6400	7300	8300	10800
Rear axle load	kg	4600	4700	4700	5200
Linear static load drum	N/cm	295	336	382	497
Operating speed	km/h	0-11.00	0-11.00	0-11.00	0-11.00
Theoretical climbing ability	%	61	60	58	60
Minimum turning radius (inner)	mm	4220	4220	4220	4220
Minimum ground clearance	mm	417	417	417	467
Steering angle	°	35	35	35	35
Oscillation angle	°	10	10	10	10
Vibration frequency	Hz	30/35	30/35	30/35	28/33
Vibration amplitude	mm	2.0/1.0	2.0/1.0	1.9/1.0	2.0/1.0
Dynamic force (high frequency/low frequency)	kN	252/181	252/181	265/192	340/236
Engine		Cummins F3.8	Cummins F3.8	Cummins F3.8	Cummins B4.5
		Turbocharged, water-cooled	Turbocharged, water-cooled	Turbocharged, water-cooled	Turbocharged, water-cooled
		electronic controlled	electronic controlled	electronic controlled	electronic controlled
Rated power @ speed		115kW @ 2200r/min	115kW @ 2200r/min	115kW @ 2200r/min	129kW @ 2200r/min
Wheels		23.1-26-12G23TL	23.1-26-12G23TL	23.1-26-12G23TL	23.1-26-12G23TL

Technical modifications reserved. Machines may be shown with options.

Optimum services， XCMG Guaranteed

XCMG approved attachments | Genuine parts | Extension of warranty | Financial solutions | Maintenance contract | Telematics | Monitoring systems

Professional Integrated Complete Solutions

XCMG group has built a strong reputation based on the quality, reliability and durability of its construction machinery. What's more, XCMG has gradually established a service network to constantly provide its local integrated and highly efficient complete solutions for all users.

Full range of services ready for you

In order to respond to your needs as fast as possible, XCMG experts are on their way to your job site from one of our facilities near you. Full range of sercivices are availible in order to reduce your total cost of ownership and increase your revenue.

XCMG Global Spareparts System

Mobile cranes | Excavators | Aerial work platforms | Wheel loaders | Road machinery